SERVICE MANUAL

ELECTRONIC CASH REGISTER

SE-S400/PCR-T500/PCR-T520

(EX-291)

SE-C450

(EX-591)

SE-S3000/PCR-T2300/PCR-T2400

(EX-294)

SE-C3500

(EX-594)

MAR. 2013

CASIO®

CONTENTS

1. SPECIFICATIONS 1
2. INITIALIZATION 2
3. INITIAL PROGRAM LOADER 4
4. DISASSEMBLY 7
5. DIAGNOSTIC OPERATION 18
6. PCB LAYOUT 36
7. EXPLODED VIEW / PARTS LIST 37

CAUTION

RISK OF EXPLOSION IF BATTERY IS REPLACED BY AN INCORRECT TYPE.

DISPOSE OF USED BATTERIES ACCORDING TO THE INSTRUCTIONS.

1. SPECIFICATIONS

1-1. Electrical Specifications

			100 V	120 V	220 V	230 V	240 V
Power consumption	In operation	Max.	0.4 A		0.26 A		
	Mode off	Max.	0.05 A		0.04 A		
Memory protection	Back-up battery Back-up period Battery life		Alkaline Battery (size AA / 2 pcs) 1 year (25 °C) Replace the battery every 1 years.				
Clock & Calendar	Accuracy Auto calendar		Within ± 30 sec. per month (25 °C) Effective until 2099 A.D.				

1-2. Environmental Specifications

Operating temperature	0 °C ~ 40 °C
Operating humidity	10 % ~ 90 %
Storage temperature	-25 °C ~ 65 °C
Storage humidity	10 % ~ 95 %
Vibration strength	Durable when one side of the unit is lifted to a height of 3 cm and dropped.

1-3. Printer Specifications

Name	LTP01-245-02A
Method	Thermal line dot printing
Dots/line	384 dots/line
Dot pitch	Length 8 dots/mm, Wide 8 dots/mm
Paper roll	58 mm × 80 mm φ (Max.)

1-4. Option List

Name	Model	Note
Waterproof cover	WT-89	SE-S400, PCR-T500, PCR-T520, SE-S3000, PCR-T2300, PCR-T2400
	WT-90	SE-C450, SE-C3500
Sheet cover	WT-91	SE-C450, SE-C3500
PC cable	PRL-CB-2	

1-5. Drawer List

Type	Model	Specification
S	DL-1336	D-21R2C-D54RM-4
S	DL-1846	D-21R2C-D53RM-4
M	DL-2437	D-24R2C-B55SRM-4
M	DL-2818	D-24R2C-A84RM-4
M	DL-2819	D-24R2C-B84SRM-4
M	DL-2820	D-24R2C-B84RM-4
M	DL-2821	D-24R2C-A84SRM-4

2. INITIALIZATION

(1) Plug the power cord to a power outlet with the Mode Switch OFF.

(2) While holding down the key, turn the Mode Switch to [PGM].

NOTE: The key to press varies according to the model. See below.

One-printer model	[FEED]
Two-printer model	[JOURNAL FEED]

(3) Release the key.

(4) The display below appears when you release the key.

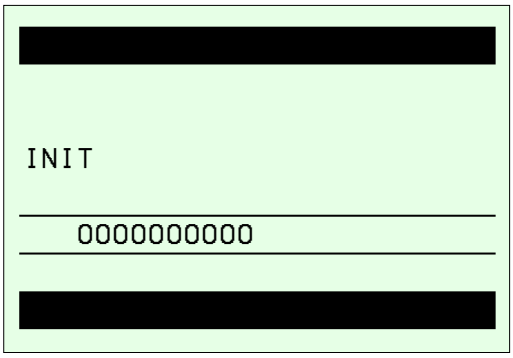

(5) Enter the INIT Code to set the INIT Code.

NOTE: It will take about 1 minute.

① Press "INIT code" [SUB TOTAL].

Region	Model Name	INIT Code
US	SE-S400, PCR-T500	22500
	SE-S400 (Dealer)	22540
	SE-S3000, PCR-T2300	23000
	SE-S3000 (Dealer)	23040
	SE-C450 (Dealer), SE-C3500 (Dealer)	27200
CANADA	PCR-T500, PCR-T520	92500
	PCR-T2300, PCR-T2400	93000
EU	SE-S400	12540
	SE-S3000	13040
	SE-C450, SE-C3500	17200
UK	SE-S400	12540
	SE-S3000	13040
	SE-C450, SE-C3500	17200
Other areas	SE-S400	12540
	SE-S3000	13040
	SE-C450, SE-C3500	17200
TAIWAN	SE-S400	12540

(6) When INIT Code setting is complete, the display below appears and the result is printed out.

```
[DEPT Setting          ]
[PLU Setting           ]
[Key Setting           ]
[Date Setting          ]
[Clerk Setting         ]
[Message Setting       ]
[POP Setting           ]
[Tax Setting           ]
Select & <CA/AMT TEND>
```

[Printout of the Result]

```
INIT 06-03-2013 20:07
                 000001

INIT
  (C) 2013 by CASIO
   COMPUTER CO.,LTD.
  All rights reserved.

   0291-0294-0591-0594

Boot Ver: 4861 AASZAA
Apli Ver: 4875 AATCAA 60

INIT.:  000000000xxxxx
```

Clearing a machine lock up

If you make a mistake in operation, the cash register may lock up to avoid damage to programs and preset data.

Should it happens, you can use the following procedure to clear the lock up without losing any data.

(1) Plug the power cord to a power outlet with the Mode Switch OFF.

(2) While holding down the key, turn the Mode Switch to [PGM].

NOTE: The key to press varies according to the model. See below.

One-printer model	[FEED]
Two-printer model	[RECEIPT FEED]

(3) When "INIT" or "FC" appears on Main Display, release the key.

(4) Press [SUB TOTAL].

NOTE: The receipt is issued.

3. INITIAL PROGRAM LOADER

When replacing the Main PCB (PCB ASSY/E291-1) with a new part, perform the following steps.

3-1. Preparation

Prepare the SD card which contains the APLI module (IPL file) in the root directory.

3-2. Procedure

(1) Unplug the power cord from the power outlet.

(2) Turn the Mode Switch to [PGM]; while holding down the key, connect the power cord to the power outlet.

NOTE: The key to press varies according to the model. See below.

One-printer model	[FEED]
Two-printer model	[JOURNAL FEED]

NOTE: Hold down the key; release the key when you hear bleep sound. The display below appears.

```
BT-INIT
```

(3) Insert the SD card into the socket on the left lateral face of the main unit.

(4) Perform the steps below to start IPL.

NOTE: It will take about 3 minutes.

① Press 4 4 4 4 9 9 9 9 [SUB TOTAL].

② Press 3 0 [SUB TOTAL].

```
APLI IPL     SD
Erasing
   XX   YY
```

(5) When IPL is complete, the INIT screen shown below appears.

```
INIT

  0000000000
```

(6) For setting LOCALE value and INIT Code, perform the steps below to launch the diagnostic program.

① Press 9 9 9 9 0 0 0 0 [SUB TOTAL].

```
BATT              DW1 CLOSE

KEY S               PRINT 1
                     MODE 1
```

The screen display varies according to the model and the status.

(7) When you enter the LOCALE value, writing of the LOCALE value starts and the result is printed out.

① Press [X] 0 0 1 6 [SUB TOTAL].

X: LOCALE value (Region)	
US	20
CANADA	20
EU	N/A (NO need to set LOCALE value)
UK	N/A (NO need to set LOCALE value)
Other areas	60
TAIWAN	60

NOTE: How to clear the local value
To clear LOCALE value, press 2 1 6 [SUB TOTAL].

[Printout of the Result]

```
LOCALE        X0016
LOCALE        OK
END           X0016
```

(8) Turn the Mode Switch to [OFF].

(9) While holding down the key, turn the Mode Switch to [PGM].

NOTE: The key to press varies according to the model. See below.

One-printer model	[FEED]
Two-printer model	[JOURNAL FEED]

(10) The display below appears when you release the key.

```
INIT

  0000000000
```

(11) Enter the INIT Code to set the INIT Code.

NOTE: It will take about 1 minute.

① Press "INIT code" [SUB TOTAL].

Region	Model Name	INIT Code
US	SE-S400, PCR-T500	22500
	SE-S400 (Dealer)	22540
	SE-S3000, PCR-T2300	23000
	SE-S3000 (Dealer)	23040
	SE-C450 (Dealer), SE-C3500 (Dealer)	27200
CANADA	PCR-T500, PCR-T520	92500
	PCR-T2300, PCR-T2400	93000
EU	SE-S400	12540
	SE-S3000	13040
	SE-C450, SE-C3500	17200
UK	SE-S400	12540
	SE-S3000	13040
	SE-C450, SE-C3500	17200
Other areas	SE-S400	12540
	SE-S3000	13040
	SE-C450, SE-C3500	17200
TAIWAN	SE-S400	12540

(12) When INIT Code setting is complete, the display below appears and the result is printed out.

```
[DEPT Setting          ]
[PLU Setting           ]
[Key Setting           ]
[Date Setting          ]
[Clerk Setting         ]
[Message Setting       ]
[POP Setting           ]
[Tax Setting           ]
Select & <CA/AMT TEND>
```

[Printout of the Result]

```
INIT 06-03-2013 20:07
                 000001

INIT
  (C) 2013 by CASIO
   COMPUTER CO.,LTD.
  All rights reserved.

   0291-0294-0591-0594

Boot Ver: 4861 AASZAA
Apli Ver: 4875 AATCAA 60

INIT.:  000000000xxxxx
```

4. DISASSEMBLY

4-1. Important

- Please note that the product on this manual may appear to be different from the actual one according to the changes such as engineering design change.
- In order to prevent static and avoid leaving grease from the hand, wear conductive gloves, finger cots, or anti-static band when assembling/disassembling the product.

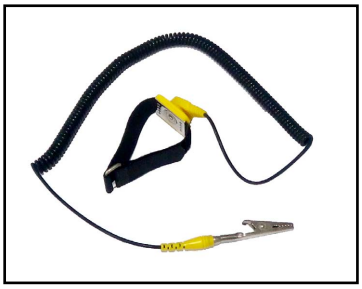

- Do not use metal tweezers. Be sure to use plastic tweezers with flat tips.
  (Anti-static tweezers are recommended)

- There are several kinds of screws. Be sure to use the correct type of screws when reassembling. It is advisable to sort the screws as shown below after removing them.

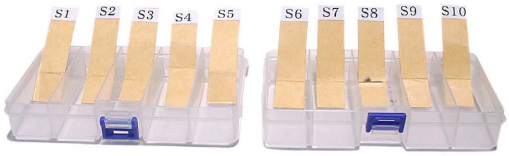

- The disassembly and assembly procedure of the equivalent model SE-S3000 are used for that of this model.

4-2. Flowchart

See the flowchart below for the order of disassembling major components.

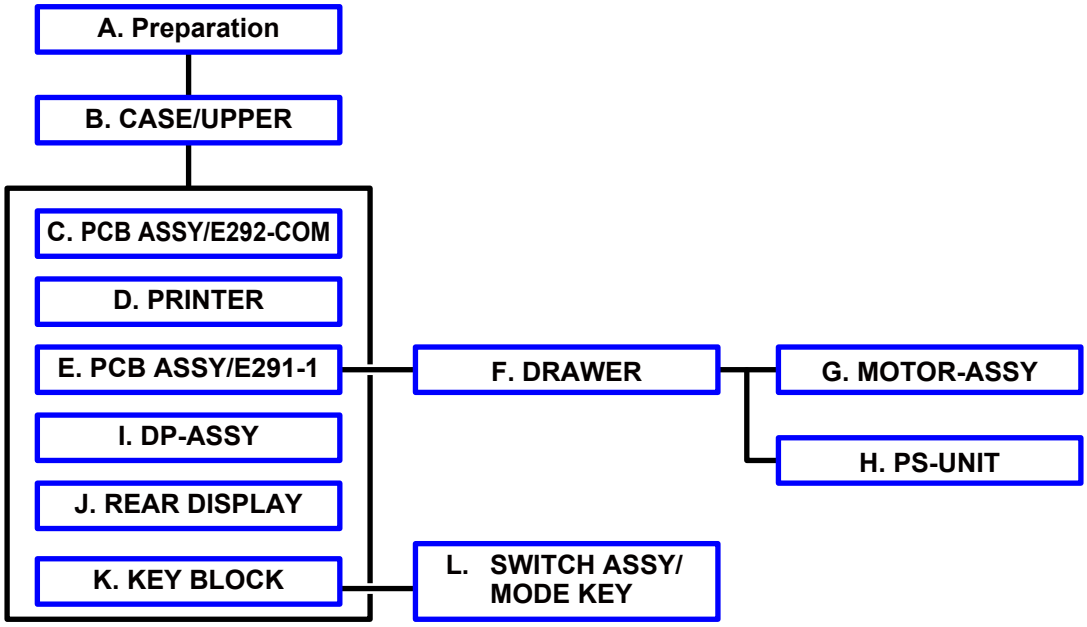

4-3. Procedure

A. Preparation

A-1. Remove the parts listed below, if any.

- COVER/PRINTER
- REEL (PULLY/WIND, SPOOL/PAPER)
- Paper roll
- COVER/BATTERY
- Memory protection batteries
- SD card

B. CASE/UPPER

B-1. Undo three screws.

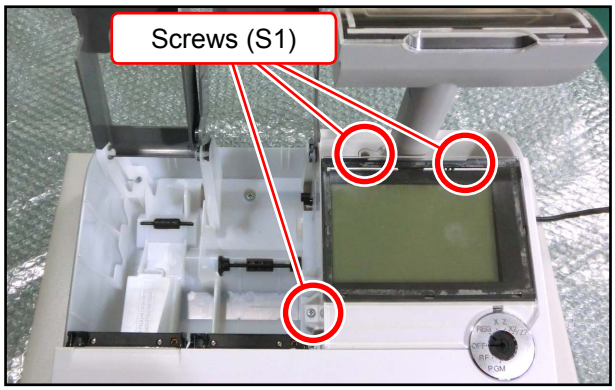

B-2. Disengage the hooks and remove the CASE/UPPER.

NOTE: It is connected by the cable. Remove the CASE/UPPER carefully.

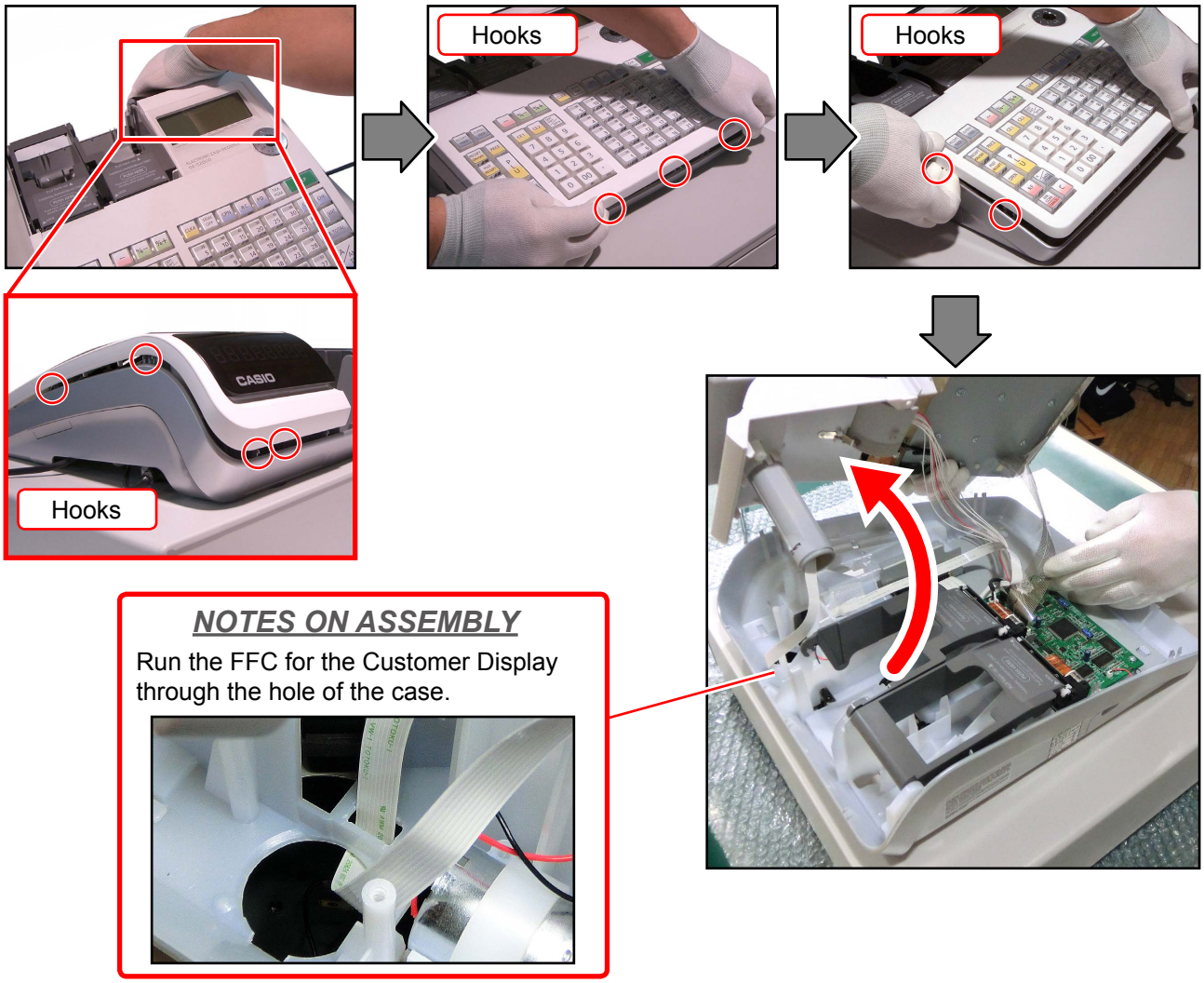

B-3. Disconnect the cable (Main Display), FFC (Customer Display), and FPC (Key).

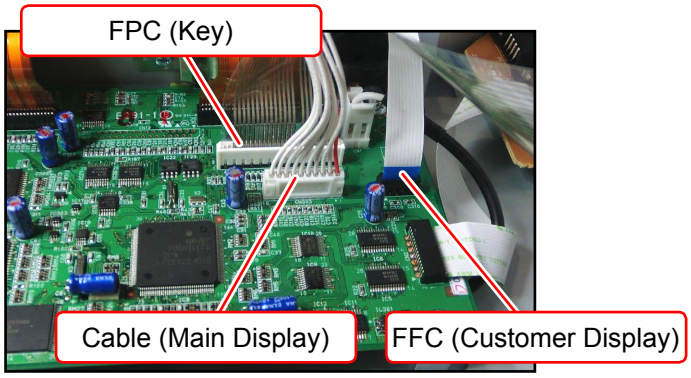

C. PCB ASSY/E292-COM

C-1. Remove the COVER/CONNECTOR.
C-2. Undo four lock screws.
C-3. Disconnect the CABLE/FFC JOINER.
C-4. Remove the PCB ASSY/E292-COM.

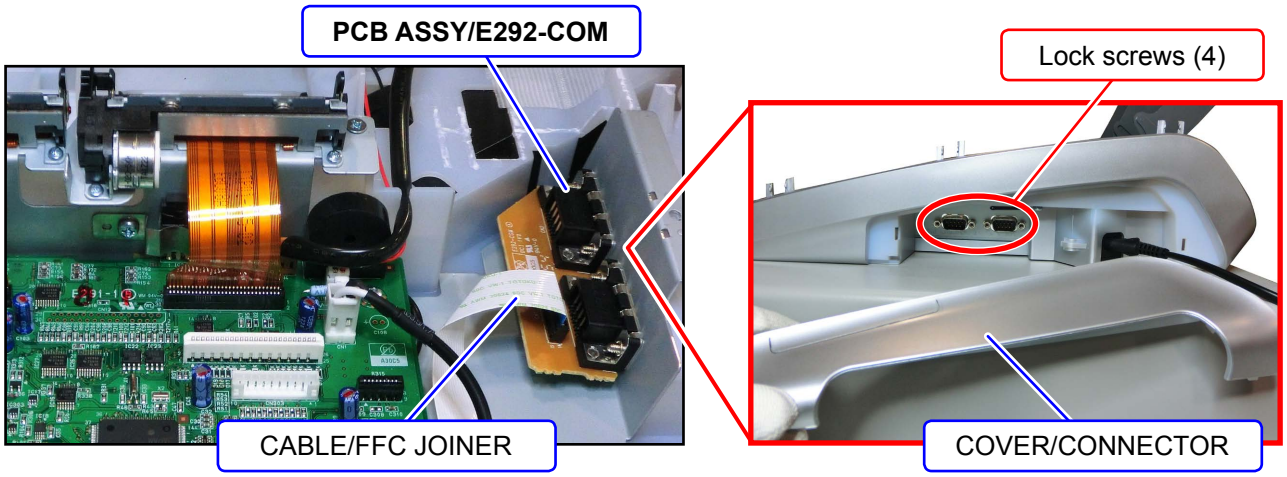

D. PRINTER

NOTE: This procedure is applicable for a single printer. Repeat the steps for two-printer models.

D-1. Undo two screws.
D-2. Disconnect one FPC.
D-3. Remove the PRINTER.

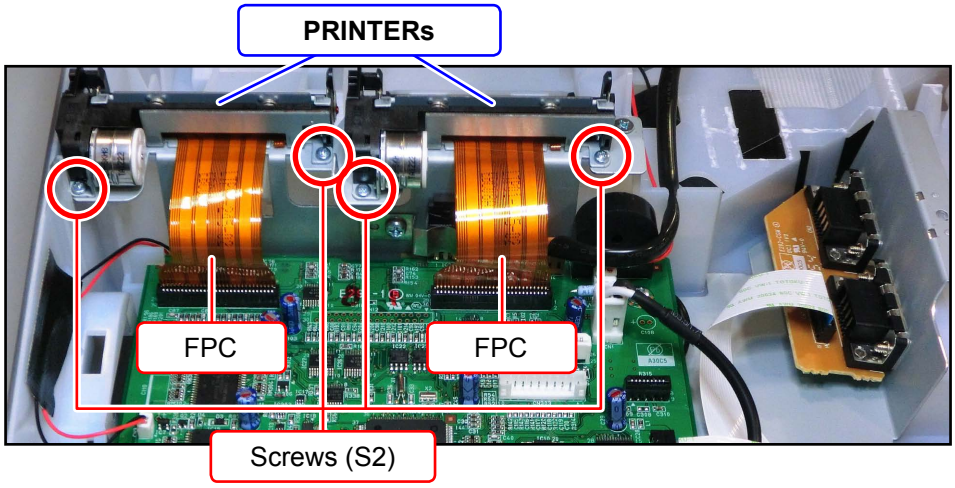

NOTE: When replacing the PRINTER with a new part, remove the roller from the new PRINTER and replace it with the roller for the PLATEN ARM.

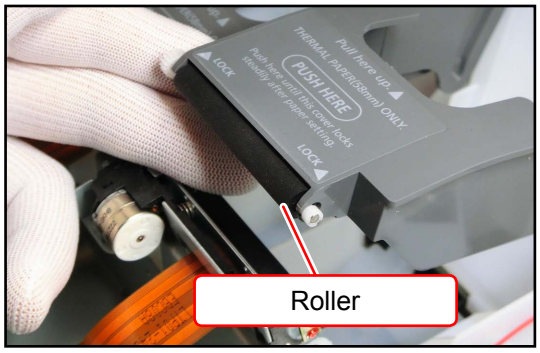

E. PCB ASSY/E291-1

E-1. Disconnect two FPCs.
E-2. Disconnect the CABLE/FFC JOINER.
E-3. Disconnect four connectors.
E-4. Undo one screw and then remove the HOLDER/IC.
E-5. Undo three screws.

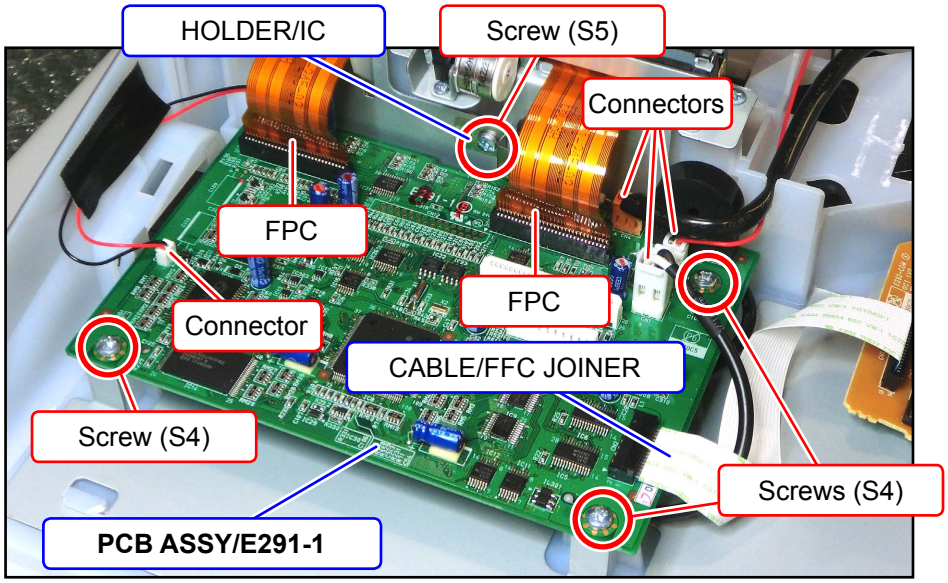

NOTES ON ASSEMBLY

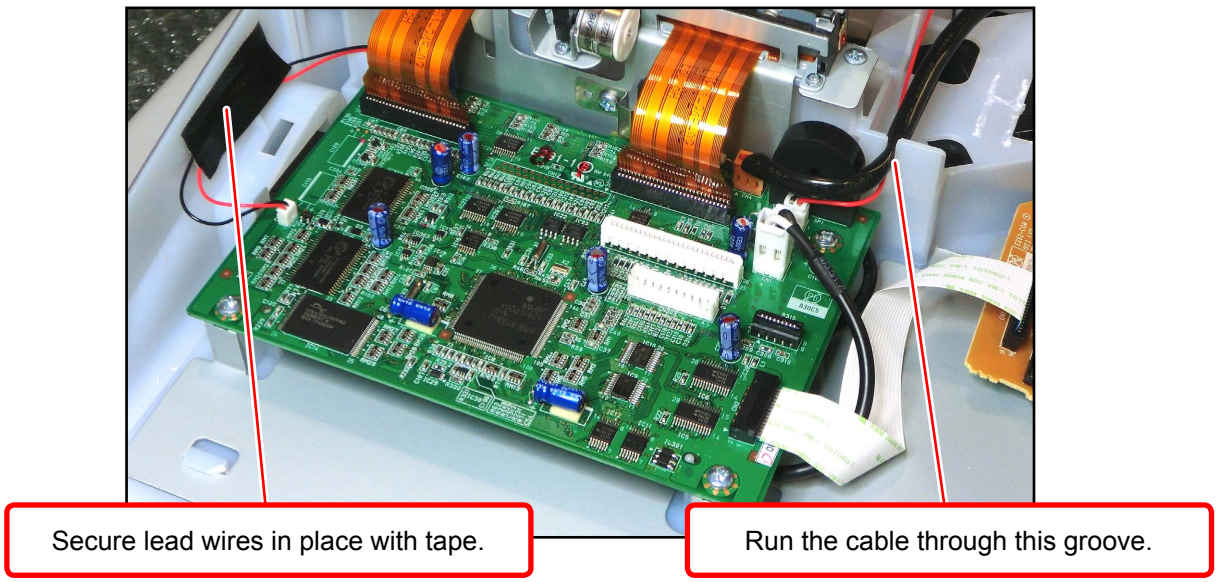

F. DRAWER

F-1. Undo two screws.

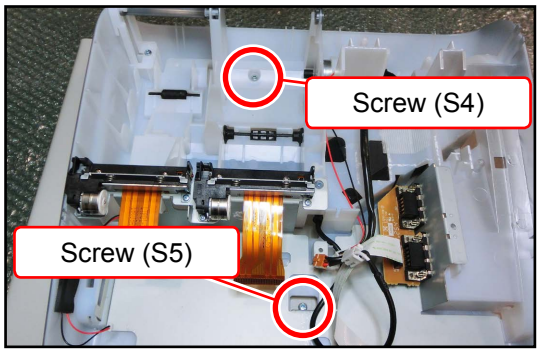

F-2. Remove the DRAWER.

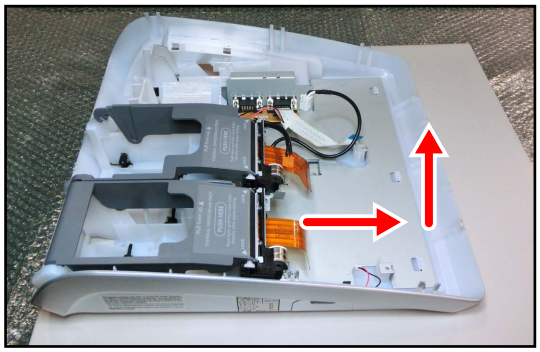

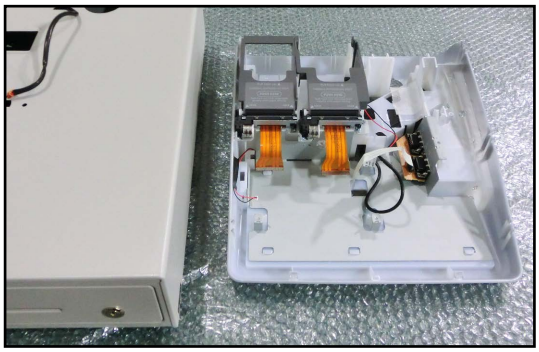

NOTES ON ASSEMBLY

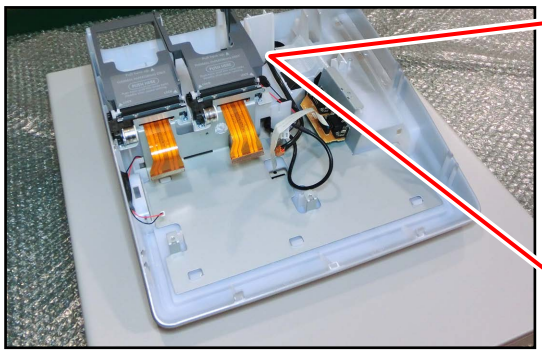

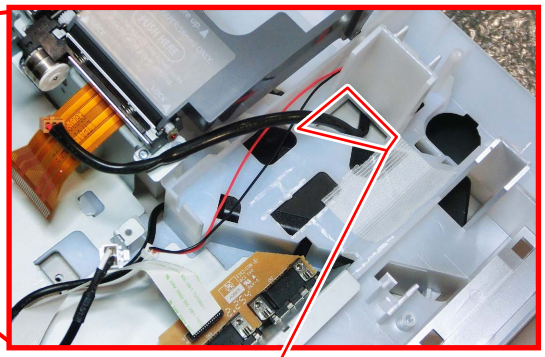

Run the DRAWER cable through this hole.

G. MOTOR-ASSY

G-1. Undo two screws.
G-2. Remove the MOTOR-ASSY.

H. PS-UNIT

H-1. Remove the PS-UNIT.

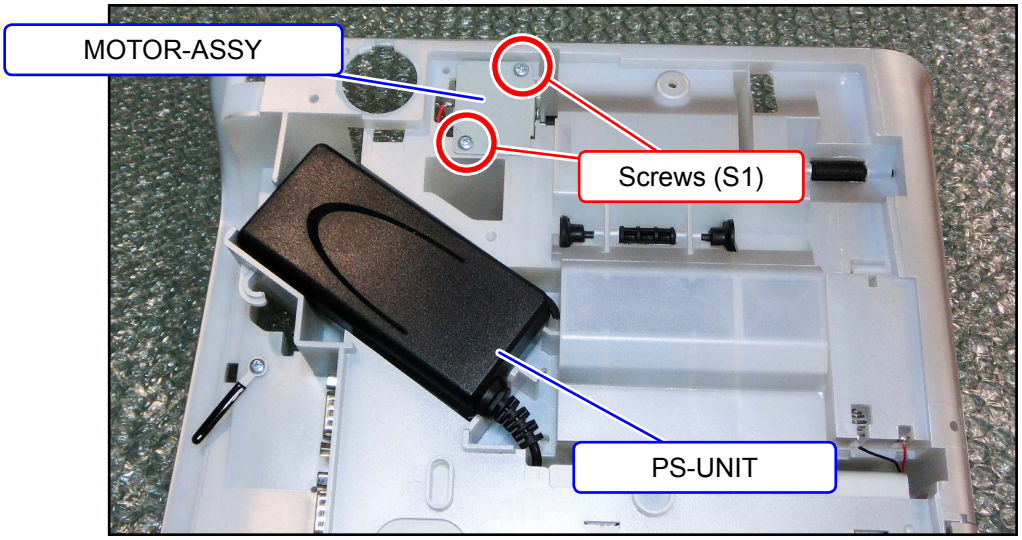

NOTES ON ASSEMBLY

Be sure to attach CUSHION/120X6 when replacing the PS-UNIT.

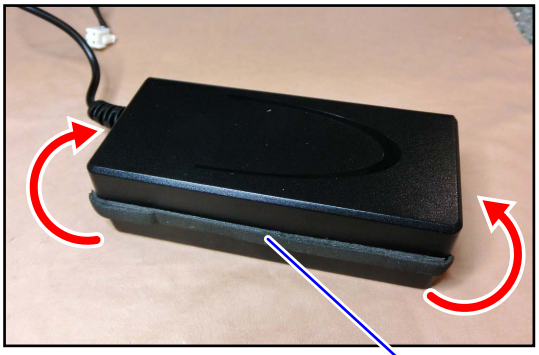

CUSHION/120X6

Attach the cushion in the middle as shown in the photo and fold the edges.

I. DP-ASSY

I-1. Undo four screws and then remove the SPRING/TILT.

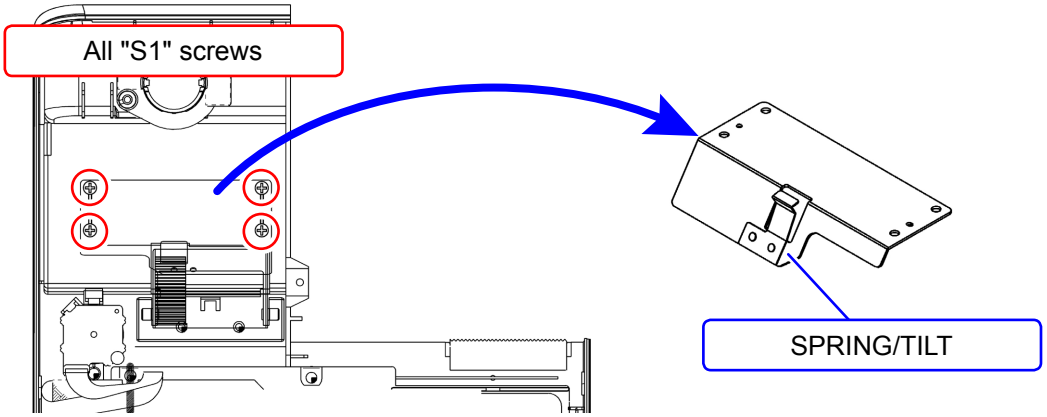

I-2. Undo two screws and then remove the HINGE/DISPLAY.

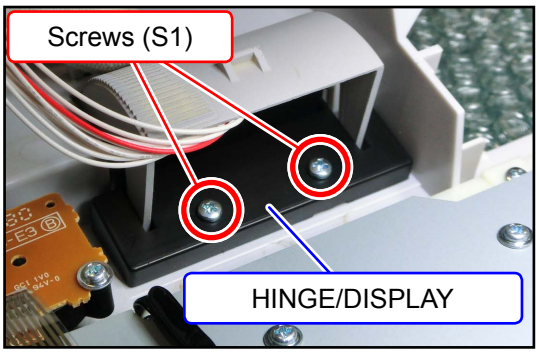

I-3. Remove the DP-ASSY.

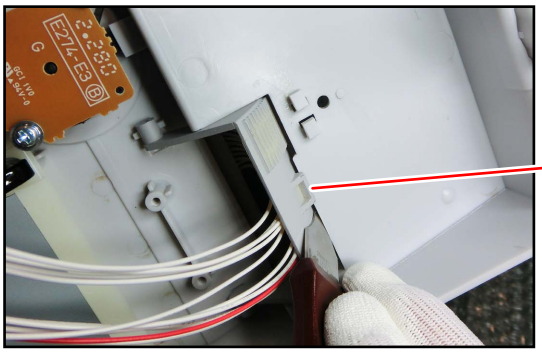

Hook

NOTE: While paying attention not to damage the case, open the case with a tool and disengage the hook.

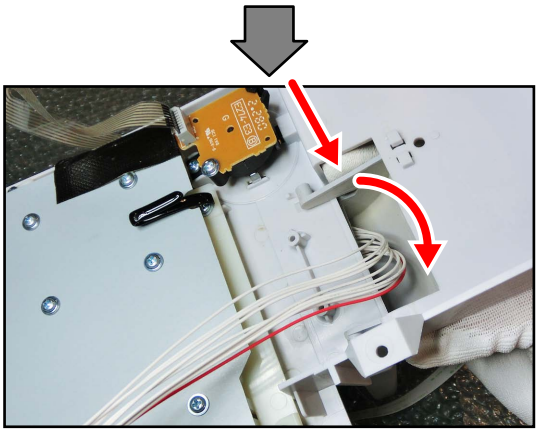

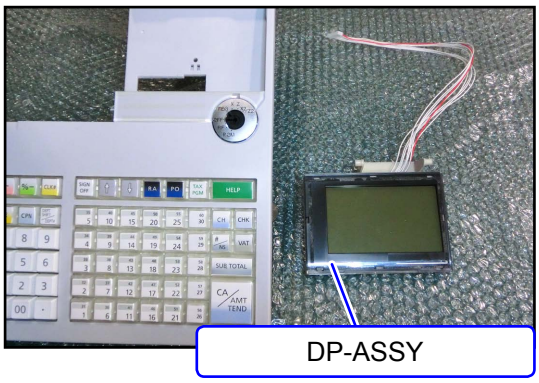

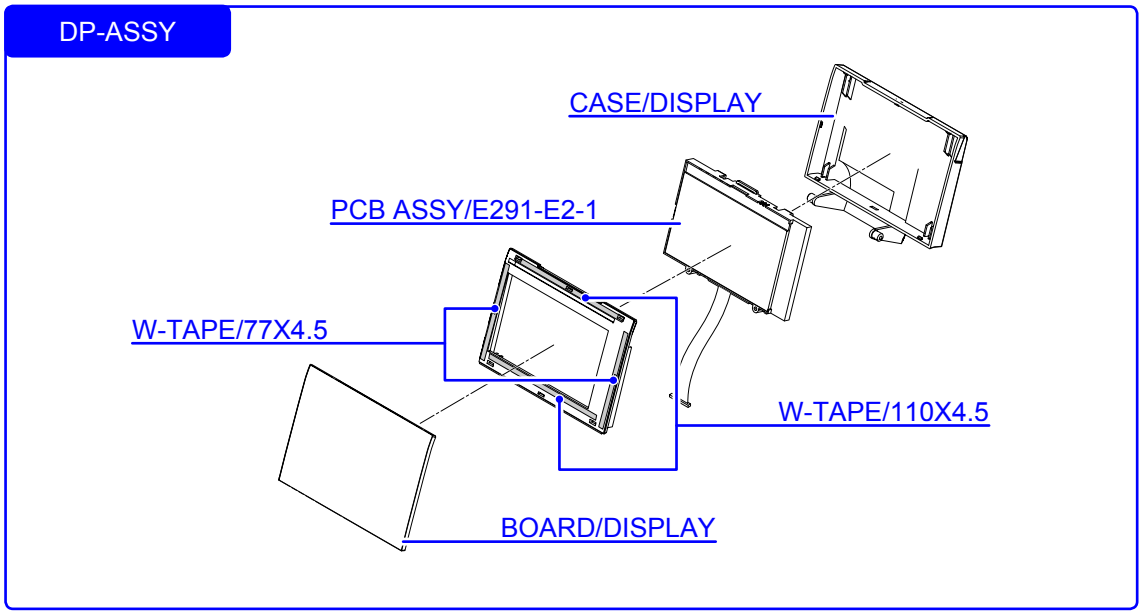

J. REAR DISPLAY

J-1. Disengage two hooks and then remove the REAR DISPLAY BLOCK.

J-2. Disengage three hooks and then remove the BUSH/RDP.

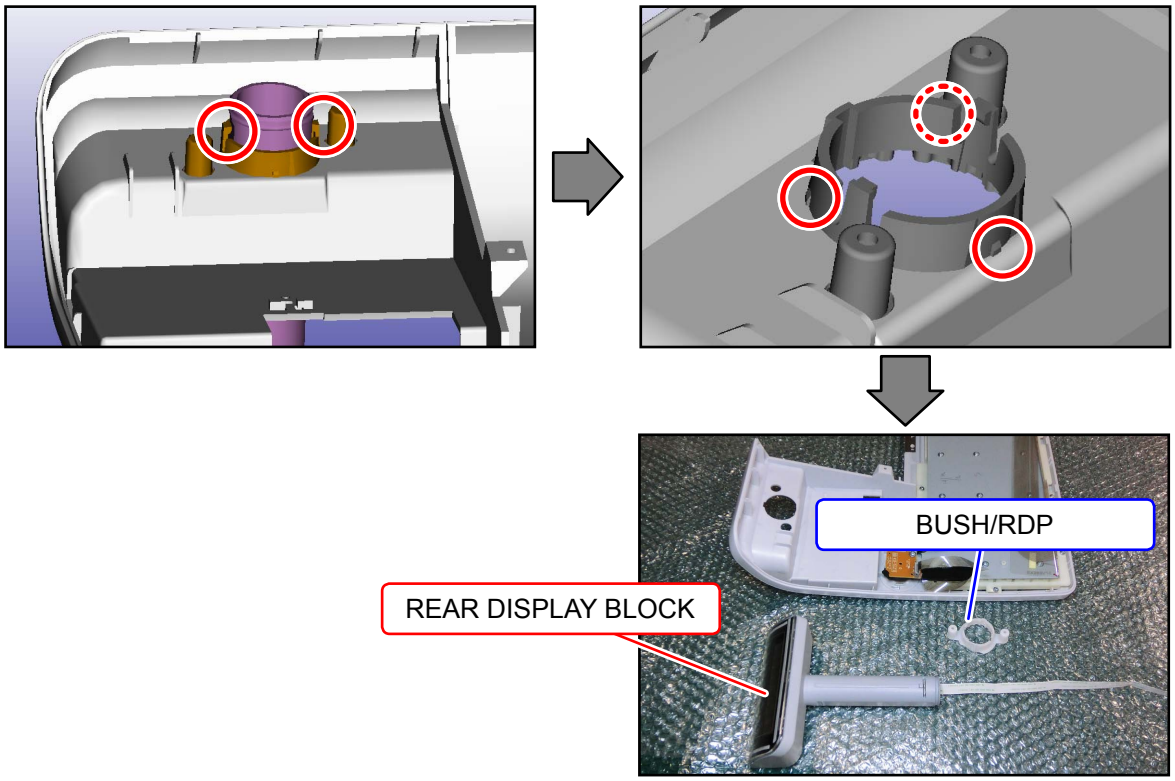

J-3. Disengage four hooks and then remove the MASK/R-DISPLAY.

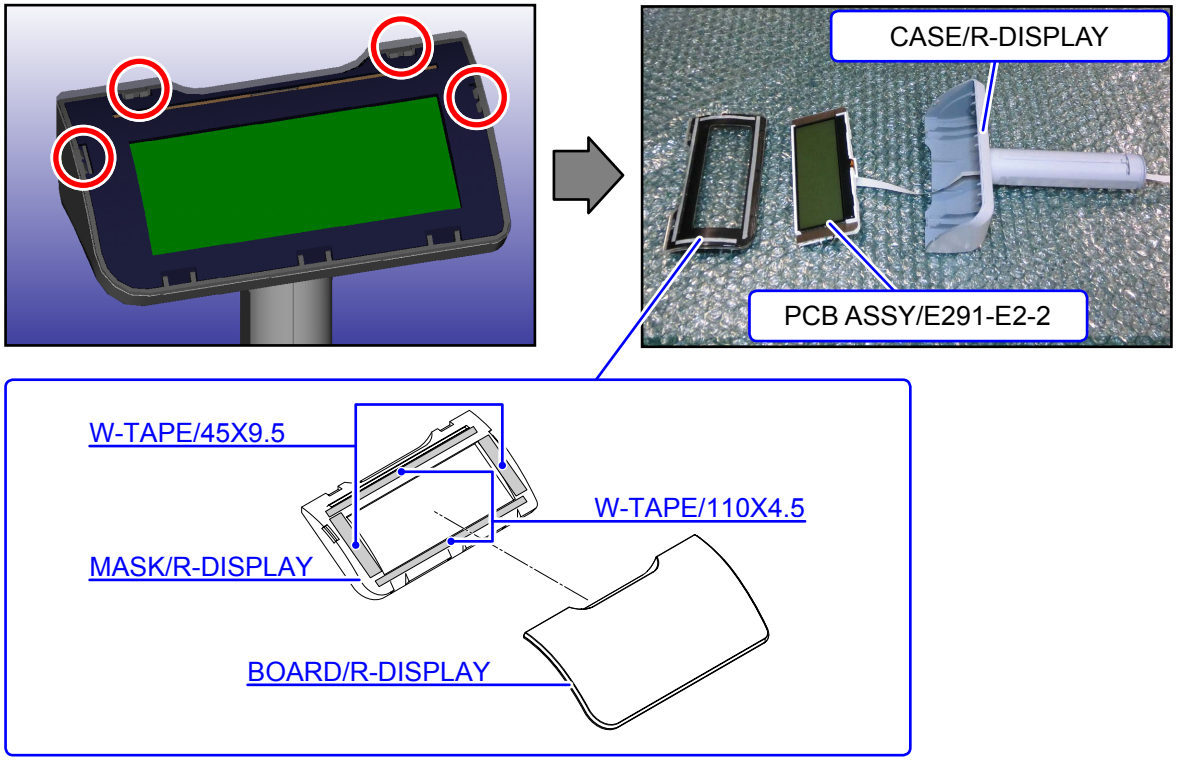

NOTES ON ASSEMBLY

Be sure that the LCD surfaces are clean.

K. KEY BLOCK

K-1. Disconnect one FPC.
K-2. Undo eight screws.
K-3. Remove the KEY BLOCK.

NOTES ON ASSEMBLY

Secure the FPC.

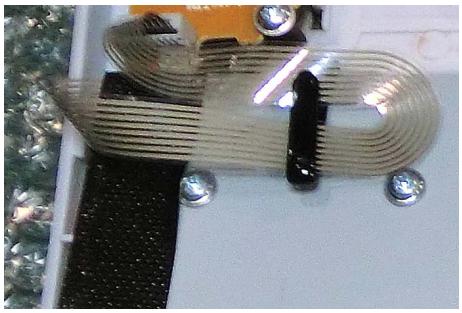

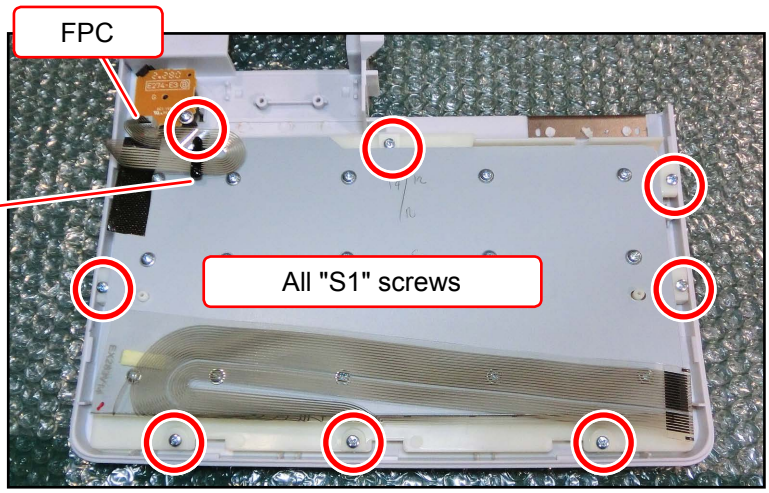

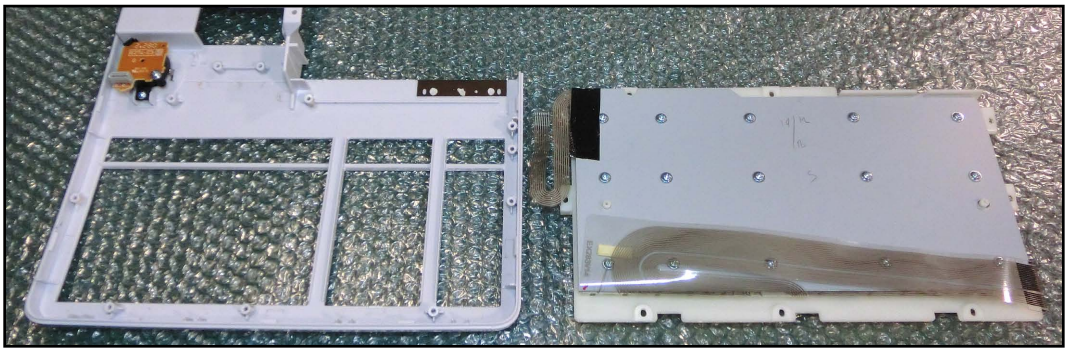

L. SWITCH ASSY/MODE KEY

L-1. Undo one screw.
L-2. Remove the SWITCH ASSY/MODE KEY.

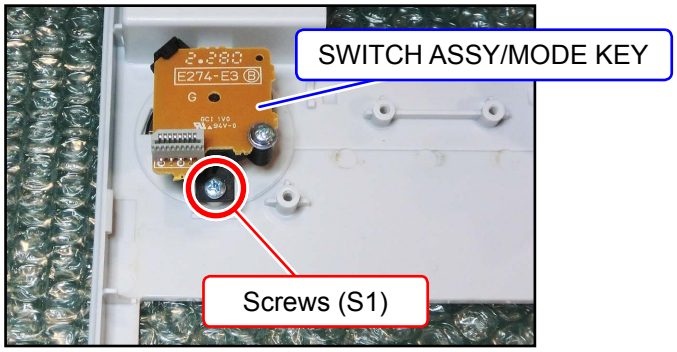

5. DIAGNOSTIC PROGRAM

5-1. Launching The Diagnostic Program

(1) Set the paper.

(2) Perform initialization.

① Plug the power cord to a power outlet with the Mode Switch OFF.

② While pressing the keys below, turn the Mode Switch to [PGM].

One-printer model	[FEED]
Two-printer model	[JOURNAL FEED]

③ Initialization is complete when "INIT" appears on the Main Display.

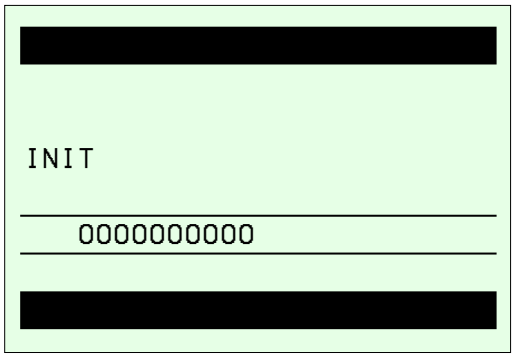

(3) Press 9 9 9 9 0 0 0 0 SUB TOTAL.

(4) The diagnostic program starts and the version information of the diagnostic program is automatically printed.

NOTE: Once the program starts, the status is displayed.

```
Boot  Ver :  xxxx xxxxxx        ← Version
Apli  Ver :  xxxx xxxxxx        ← Diag Version
```

5-2. Exiting the Diagnostic Program

(1) Turn the Mode Switch to [OFF].

(2) Perform initialization.

(3) Unplug the Power cord.

5-3. Notes For The Diagnostic Program

- All test results from a two-printer-type model are printed from the Receipt Printer.
- For the number of test to perform, you may select "once" or "infinite loop".
  If "0" is entered as the number of times to perform the test, the test will be performed only once.
  If any value between "1" and "9" is entered, the test is repeated infinitely. To forcibly terminate the infinite loop, press [C] key or turn the Mode Switch to [OFF].
- When the Mode Switch is [OFF], all displays are turned off and no diagnostic commands are accepted.
- To forcibly terminate a test, press [C] key or turn the Mode Switch to [OFF].
  If a test is terminated, the device prints out the following:

  ESC

- If a command of 10 digits or more is entered, the values entered initially are canceled.
  [1] [2] [1] [2] [3] [4] [5] [6] [7] [8] [9] [0] [SUB TOTAL].
  If the above command is entered, the values indicated with double-lined boxes will be displayed in the main display.
  The first two digits, "1" and "2", will be canceled and, therefore, will not be displayed.
- When a command starts with "0", "0" will not be printed.
- When printed characters are hidden behind the printer cover, press "FEED" key to advance the printer paper.

5-4. Check Item

This diagnostic program tests the following items.

No.	Item	Command
1	Status Display	-
2	Batch Test 1 (RAM/Printer/Time Setting/Buzzer/Drawer)	1
3	Batch Test 2 (Main Display, Customer Display)	2
Memory Test		
4	RAM Test (Write/Read)	n011
5	Flash ROM Test (Clear/Write/Read)	n312
6	SD Card Test (Write/Read, Report)	n014 (Write/Read) n614 (Report)
Display Test		
7	Display Test (Main, Customer)	n021 (Main) n022 (Customer)
8	Back Light Test (Main, Customer)	c0121 (Main) c0122 (Customer)
9	Contrast Adjustment (Main, Customer)	421 (Main) 422 (Customer)
Printer Test		
10	Internal Printer Character Print Test	acn03d
RS2323C Test		
11	RS232C Test (Port Test, Batch Test)	xn04d (Port Test) 40 (Batch Test)
Time/Drawer/Buzzer/Key/OBR Test		
12	Time & Date Setting/Time & Date Display	hhmmss0070 (Time Setting) yymmdd0170 (Date Setting) 70 or 170 (Time and Date Display)
13	Drawer Open Test	n091
14	Buzzer Test	n092
15	Key Test	94
16	OBR Test	95

5-5. Operation Of Each Test

[1] Status Display

[Function]

Displays the status of various functions.

[Display]

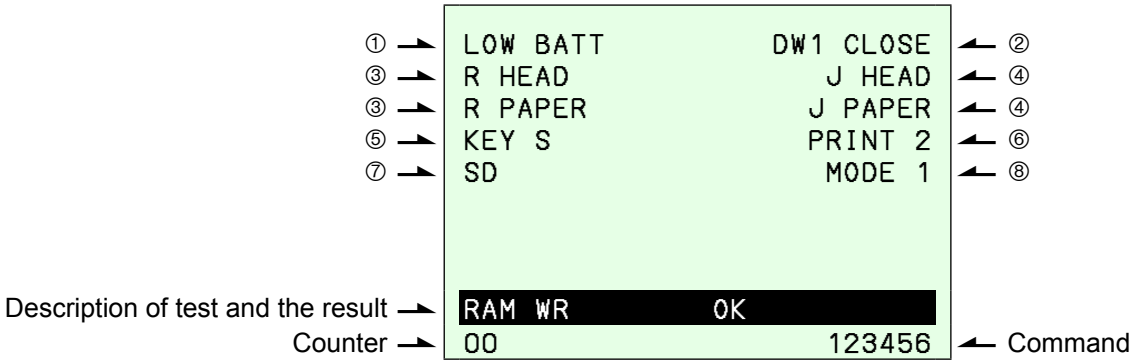

① Battery Status	
Display	Status
LOW BATT	Low Battery
BATT	Normal

② Drawer Status	
Display	Status
DW1 OPEN	Open
DW1 CLOSE	Close

③ Receipt Paper Status	
Display	Status
R HEAD	Platen arm is open
Not displayed	Platen arm is set
R PAPER	No paper
Not displayed	Paper is set

④ Journal Paper Status	
Display	Status
J HEAD	Platen arm is open
Not displayed	Platen arm is set
J PAPER	No paper
Not displayed	Paper is set

⑤ Key Type	
Display	Status
KEY S	Stroke Type
KEY H	Hybrid Type

⑥ Printer Type	
Display	Status
PRINT 1	Reciept
PRINT 2	Reciept and Journal

⑦ SD Status	
Display	Status
SD	SD card is inserted
Not displayed	SD card is not inserted

⑧ Mode Switch Status	
Display	Status
1	PGM (Programming)
2	RF (Refund)
3	REG (Register)
4	X (Read)
5	Z (Reset)
6	Reciept X2/Z2 (Periodic sale read/reset)

[2] Batch Test 1

[Function]

RAM, printer, time setting, buzzer and drawer tests are performed continuously.

[Operation]

Command : 1 SUB TOTAL

Performs the following tests in sequence.

NOTE: Refer to each check item for details.

(1) RAM test
(2) Test print
(3) Time setting: Set the following data.
Arranged data: 2005 December 31,23:59'30
(4) Buzzer: Ring once the one shot buzzer. No print or display in this test.
(5) Drawer open
(6) Receipt issuance

[Printout of the Result]

Receipt

```
BATCH          1
RAM WR         OK
BBBBBBBBBBBBBBBBBBBBBBB
DATE           05/12/31
TIME           23:59-30
DRW            OK
END            1
```

Journal

```
BBBBBBBBBBBBBBBBBBBBBBB
```

[3] Batch Test 2

[Function]

Main display test and Customer display test are performed continuously.

[Operation]

Command : 2 SUB TOTAL

Performs the following tests in sequence.

Pressing any key changes the display.

NOTE: Refer to each check item for details.

(1) Main display test
(2) Main display back light test
(3) Customer display test
(4) Customer display back light test

[Printout of the Result]

```
BATCH          2
DISP           OK
BACK LIGHT     OK
DISP           OK
BACK LIGHT     OK
END            2
```

[4] RAM Test (Write/Read)

[Function]

Write/read test is performed.

[Operation]

Command : [n] [0] [1] [1] [SUB TOTAL]

n: Number of times to run	
0	Once (Can be omitted)
1 ~ 9	Infinite loop (To forcibly terminate the test, press the [C] key.)

[Display of the Result]

```
RAM WR          OK
```

[Printout of the Result]

```
RAM             11
RAM WR          OK
END             11
```

[5] Flash ROM Test (Clear/Write/Read)

[Function]

After clear function clears the memory, write/read test is performed.

[Operation]

Command : [n] [3] [1] [2] [SUB TOTAL]

n: Number of times to run	
0	Once (Can be omitted)
1 ~ 9	Infinite loop (To forcibly terminate the test, press the [C] key.)

[Display of the Result]

```
FLASH           OK
```

[Printout of the Result]

```
ROM             312
FLASH           OK
END             312
```

[6] SD Card Test (Write/Read, Report)

[6-1] SD Card Write/Read Test

[Function]

Writes the text file for the test (test.txt) on the SD card and tests whether the written file can be read.

[IMPORTANT]

The test result shows NG if you use a write-protected SD card.

The text file written during the test (test.txt) will not be erased.

If the SD card contains a file with the same name (test.txt), delete "text.txt" file first before performing the SD card check.

[Operation]

Command : [n] [0] [1] [4] [SUB TOTAL]

n: Number of times to run	
0	Once (Can be omitted)
1 ~ 9	Infinite loop (To forcibly terminate the test, press the [C] key.)

[Display of the Result]

```
SD WR          OK
```

[Printout of the Result]

```
SD                14
SD WR             OK
END               14
```

[6-1] SD Card Report

[Function]

Prints out the memory size of the SD card and its write-protection status.

[Operation]

Command : [n] [6] [1] [4] [SUB TOTAL]

n: Number of times to run	
0	Once (Can be omitted)
1 ~ 9	Infinite loop (To forcibly terminate the test, press the [C] key.)

[Display of the Result]

```
SD SIZE        OK
```

[Printout of the Result]

```
SD                614
Size = 3767 MB
WriteProtect = OFF
SD SIZE           OK
END               614
```

[7] Display Test

[Function]

Tests the Main Display and the Customer Display.

[Operation]

All test procedures are the same for both tests except for the input command.

Main Display Command : [n] [0] [2] [1] [SUB TOTAL]

Customer Display Command : [n] [0] [2] [2] [SUB TOTAL]

n: Number of times to run	
0	Once (Can be omitted)
1 ~ 9	Infinite loop (To forcibly terminate the test, press the [C] key.)

Pressing any key changes the display.

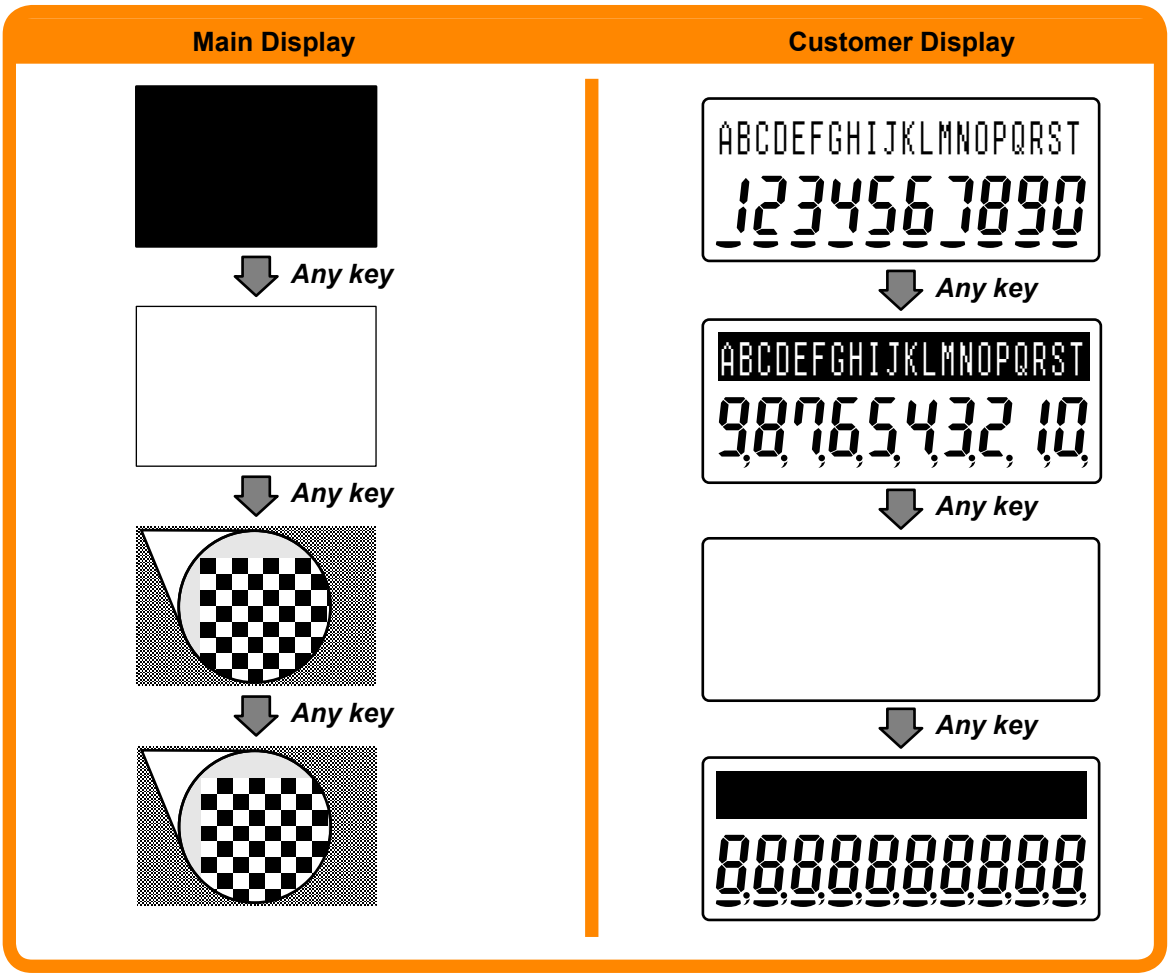

[Display of the Result]

```
DISP            OK
```

[Printout of the Result]

Main Display

DISP	21
DISP	OK
END	21

Customer Display

DISP	22
DISP	OK
END	22

[8] Back Light Test

[Function]

Tests the Back Light of the Main Display and the Customer Display.

[Operation]

All test procedures are the same for both tests except for the input command.

Main Display Command : [C] [0] [1] [2] [1] [SUB TOTAL]

Customer Display Command : [C] [0] [1] [2] [2] [SUB TOTAL]

c: Backlight ON/OFF	
0	①Back Light "OFF" ②Back Light "OFF" with any key
1	Back Light "OFF"
2	Back Light "ON"

[Display of the Result]

```
BACK LIGHT     OK
```

[Printout of the Result]

Main Display

DISP	121
BACK LIGHT	OK
END	121

Customer Display

DISP	122
BACK LIGHT	OK
END	122

[9] Contrast Adjustment

[Function]

Adjusts the LCD contrast and writes the adjustment to the FLASH ROM.

Up to 16 adjustments can be written to the Flash ROM. If more than 16 adjustments are written, an error occurs.

[Operation]

All adjustments procedures are the same for both tests except for the input command.

Main Display Command : [4] [2] [1] [SUB TOTAL]

Customer Display Command : [4] [2] [2] [SUB TOTAL]

Use the keys below to adjust the contrast, and press [CA/AMT/TEND] key to save the adjustment value in the Flash ROM.

Model	Contrast +1 (Dark)	Contrast -1 (Light)
SE-S400/PCR-T500/PCR-T520	[POST RECEIPT]	[PRICE]
SE-C450/SE-C3500	[ERR CORR. CANCEL]	[RF]
PCR-T2300/PCR-T2400/SE-S3000 (US)	[RECEIPT ON/OFF]	[OPEN]
SE-S3000 (except US)	[RECEIPT ON/OFF]	[PRICE]

[Main Display Contrast Adjustment]

```
ABCDEFGHIJKLMNOPQRSTUVWXYZ
abcdefghijklmnopqrstuvwxyz
1234567890123456789012345 6
7890123456789012345678901 2
ABCDEFGHIJKLMNOPQRSTUVWXYZ
abcdefghijklmnopqrstuvwxyz
1234567890123456789012345 6
6543210987654321098765432 1
CONTRAST                XX
```

← XX is the adjustment value

[Customer Display Contrast Adjustment]

Main Display

```
CONTRAST                XX
```

← XX is the set value

Customer Display

```
ABCDEFGHIJKLMNOPQRST
1234567890
```

[Display of the Result]

```
LCD CONTRAST    XX
```

← XX is the set value

[Printout of the Result]

Main Display

DISP	421
LCD CONTRAST	OK
END	421

Customer Display

DISP	422
LCD CONTRAST	OK
END	422

[IMPORTANT]

If more than 16 adjustments are written, an error occurs. In such cases, perform the following command to clear the data.

Main Display Command : 1 0 4 2 1 SUB TOTAL

Customer Display Command : 1 0 4 2 2 SUB TOTAL

[10] Internal Printer Character Print Test

[Function]

Tests if the internal printer prints characters correctly.

[Operation]

Command : [a] [c] [n] [0] [3] [d] [SUB TOTAL]

a: Printing property	
0	Normal print out
1	Reduced size print out

c: Characters to be printed	
0	Prints the character "B"
1	Prints all characters

n: Number of times to run	
0	Once (Can be omitted)
1 ~ 9	Infinite loop (To forcibly terminate the test, press the [C] key.)

d: Printer select	
3	Receipt
4	Journal
5	Receipt and Journal

[Printout of the Result (Two-printer model)]

Receipt Printer | **Journal Printer**

Receipt Only (10033)

```
PRT              10033
 !"#$%&'()*+,-./01234567
89:;<=>?@ABCDEFGHIJKLMNO
PQRSTUVWXYZ[\]^_`abcdefg
hijklmnopqrstuvwxyz{|}~
ÇüéâäàåçêëèïîìÄÅÉæÆôöòûù
ÿÖÜ¢£¥₧ƒáíóúñÑªº¿⌐¬½¼¡«»
END              10033
```

Journal Only (10034)

```
PRT              10034
END              10034
```

```
 !"#$%&'()*+,-./01234567
89:;<=>?@ABCDEFGHIJKLMNO
PQRSTUVWXYZ[\]^_`abcdefg
hijklmnopqrstuvwxyz{|}~
ÇüéâäàåçêëèïîìÄÅÉæÆôöòûù
ÿÖÜ¢£¥₧ƒáíóúñÑªº¿⌐¬½¼¡«»
```

Receipt and Journal (10035)

```
PRT              10035
 !"#$%&'()*+,-./01234567
89:;<=>?@ABCDEFGHIJKLMNO
PQRSTUVWXYZ[\]^_`abcdefg
hijklmnopqrstuvwxyz{|}~
ÇüéâäàåçêëèïîìÄÅÉæÆôöòûù
ÿÖÜ¢£¥₧ƒáíóúñÑªº¿⌐¬½¼¡«»
END              10035
```

```
 !"#$%&'()*+,-./01234567
89:;<=>?@ABCDEFGHIJKLMNO
PQRSTUVWXYZ[\]^_`abcdefg
hijklmnopqrstuvwxyz{|}~
ÇüéâäàåçêëèïîìÄÅÉæÆôöòûù
ÿÖÜ¢£¥₧ƒáíóúñÑªº¿⌐¬½¼¡«»
```

[Printout of the Result (One-printer model)]

Receipt Printer

Receipt Only (10033)

```
PRT                 10033
 !"#$%&'( )*+,-./01234567
89:;<=>?@ABCDEFGHIJKLMNO
PQRSTUVWXYZ[\]^_`abcdefg
hijklmnopqrstuvwxyz{|}~
ÇüéâäàåçêëèïîìÄÅÉæÆôöòûù
ÿÖÜ¢£¥₧ƒáíóúñÑªº¿⌐¬½¼¡«»
END                 10033
```

Journal Only (10034)

```
PRT                 10034
 !"#$%&'( )*+,-./01234567
89:;<=>?@ABCDEFGHIJKLMNO
PQRSTUVWXYZ[\]^_`abcdefg
hijklmnopqrstuvwxyz{|}~
ÇüéâäàåçêëèïîìÄÅÉæÆôöòûù
ÿÖÜ¢£¥₧ƒáíóúñÑªº¿⌐¬½¼¡«»
END                 10034
```

Receipt and Journal (10035)

```
PRT                 10035
 !"#$%&'( )*+,-./01234567
 !"#$%&'( )*+,-./01234567
89:;<=>?@ABCDEFGHIJKLMNO
89:;<=>?@ABCDEFGHIJKLMNO
PQRSTUVWXYZ[\]^_`abcdefg
PQRSTUVWXYZ[\]^_`abcdefg
hijklmnopqrstuvwxyz{|}~
hijklmnopqrstuvwxyz{|}~
ÇüéâäàåçêëèïîìÄÅÉæÆôöòûù
ÇüéâäàåçêëèïîìÄÅÉæÆôöòûù
ÿÖÜ¢£¥₧ƒáíóúñÑªº¿⌐¬½¼¡«»
ÿÖÜ¢£¥₧ƒáíóúñÑªº¿⌐¬½¼¡«»
END                 10035
```

[11] RS232C Test (Port Test, Batch Test)

[Function]

Tests the communication of RS232C using the loop back tool.

[IMPORTANT]

Information of the loop back tool.

Pin assignment on the register side (male)	Pin	Signal Name	Connection information
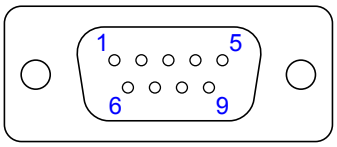	1	DCD	
	2	RxD	
	3	TxD	
	4	DTR	
	5	GND	
	6	DSR	
	7	RTS	
	8	CTS	
	9	RI	

[11-1] RS232C Port Test

[Operation]

Connect the loop back tool to the connector which you wish to test.

Command : [x] [n] [0] [4] [d] [SUB TOTAL]

x: Baud rate selection (bps)
0=2400, 1=4800, 2=9600, 3=19.2 k, 4=38.4 k, 5=56 k, 6=Invalid, 7=115.2k

n: Number of times to run	
0	Once (Can be omitted)
1 ~ 9	Infinite loop (To forcibly terminate the test, press the [C] key.)

d: COM Port select	
1	COM1 (UART1)
2	COM2 (UART0)

[Display of the Result]

```
TxD     -->     RxD     OK
```

[Printout of the Result]

```
COM1                    30041
RTS1=1 --> CTS1=1       OK
DTR1=1 --> DSR1=1       OK
RTS1=0 --> CTS1=0       OK
DTR1=0 --> DSR1=0       OK
TxD     -->   RxD       OK
END                     30041
```

[11-2] RS232C Port Batch Test

[Operation]

Connect the loop back tools to COM1 and COM2.

Command : 4 0 SUB TOTAL

Baud rate (bps)
COM1=19.2 k, COM2=9600

Number of times to run
Once

[Display of the Result]

```
TxD     -->     RxD     OK
```

[Printout of the Result]

```
COM BATCH              40
RTS1=1 --> CTS1=1      OK
DTR1=1 --> DSR1=1      OK
RTS1=0 --> CTS1=0      OK
DTR1=0 --> DSR1=0      OK
TxD    -->   RxD       OK
RTS2=1 --> CTS2=1      OK
DTR2=1 --> DSR2=1      OK
RTS2=0 --> CTS2=0      OK
DTR2=0 --> DSR2=0      OK
TxD    -->   RxD       OK
END                    40
```

[12] Time & Date Setting/Time & Date Display

[Function]

Allows you to check or change the time (hour, minutes, seconds) and date (year, month, day) that are currently set.

[12-1] Time & Date Setting

[Operation]

<Time setting>

Command : h h m m s s **0** **0** **7** **0** SUB TOTAL

hh	Hour	**mm**	Minutes	**ss**	Seconds

- The new settings are printed out when the it is complete.

<Date setting>

Command : y y m m d d **0** **1** **7** **0** SUB TOTAL

yy	Year	**mm**	Month	**dd**	Day

- The new settings are printed out when the it is complete.

[12-2] Time & Date Display

Command : **7** **0** or **1** **7** **0** SUB TOTAL

- To end the display, press the C key.

[Display of the Result]

```
        YY/MM/DD  HH:MM SS
```

[13] Drawer Open Test

[Function]

Tests whether drawers operate correctly. The drawer sensor checks every two seconds while the drawer open test is performed infinite times. Only when the drawer is closed, the drawer is reopened.

[Operation]

Command : n **0** **9** **1** SUB TOTAL

n: Number of times to run	
0	Once (Can be omitted)
1 ~ 9	Infinite loop (To forcibly terminate the test, press the C key.)

[Display of the Result]

```
DRW            OK
```

[Printout of the Result]

```
DRW            91
DRW            OK
END            91
```

[14] Buzzer Test

[Function]

Tests whether buzzer sounds correctly.

[Operation]

Command : [n] [0] [9] [2] [SUB TOTAL]

n: Number of times to run	
0	Once (Can be omitted)
1 ~ 9	Infinite loop (To forcibly terminate the test, press the [C] key.)

- If you select "once", one-shot buzzer sounds.
- If you select "infinite loop", 500-msec intermittent buzzer sounds repeatedly.

[Printout of the Result]

```
BUZZ          92
END           92
```

[15] Key Test

[Function]

Tests keys.

[Operation]

Command : [9] [4] [SUB TOTAL]

- Press any key other than [C] KEY and printer feed key; the Key Code is displayed on the Main Display and the Customer Display.

Customer Display

← Key Code

Customer Display

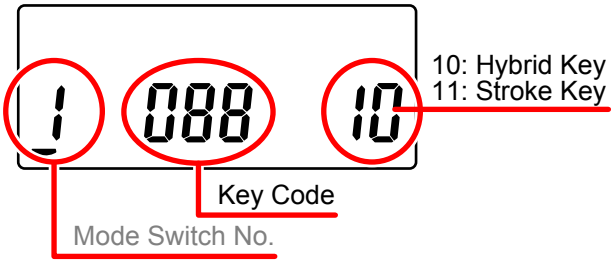

- Pressing paper feed key will operate the feeder.
  (One-printer-type model: [FEED], Two-printer-type model: [JOURNAL FEED] and [RECEIPT ON/OFF])
- Pressing [C] key will terminate the test.

[Printout of the Result]

```
KEY           94
ESC
END           94
```

[Key Code Chart]

Stroke Key

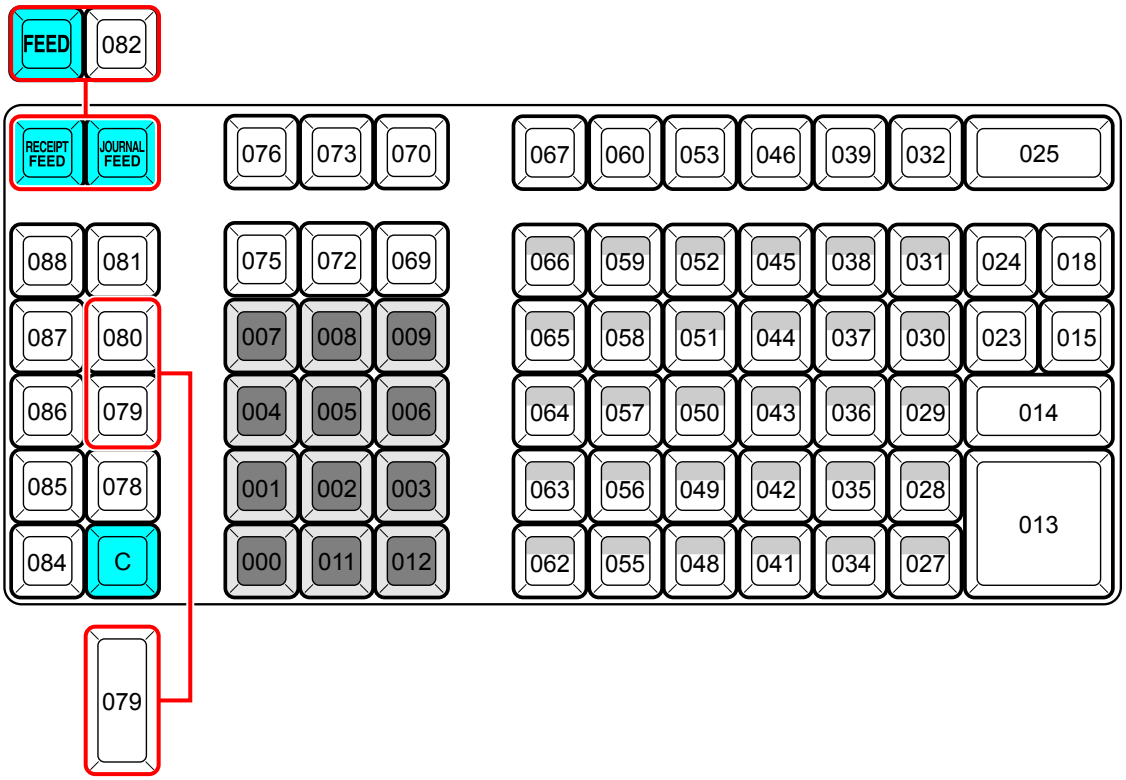

Hybrid Key

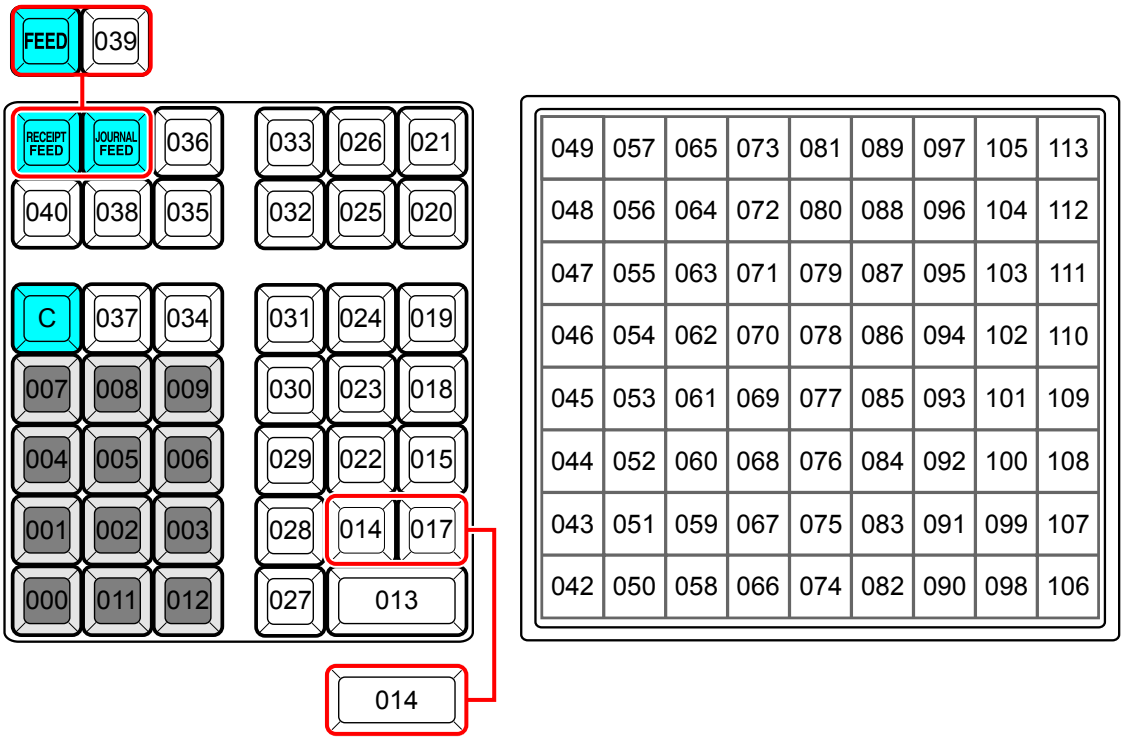

[16] OBR Test

NOTE: This test is effective only COM2.

[Function]

This is a scanner test. The test enters the wait mode for the scanner input, and waits only for scanner. The test determines the result between OK and NG by comparing the fixed data and the read data.

* The fixed barcode is as follows.

4940 0250

[Operation]

Command : 9 5 SUB TOTAL

- To end the display, press the C key.

[Printout of the Result]

OBR	95
OBR	OK
END	95

6. PCB LAYOUT

6-1. E291-1 PCB

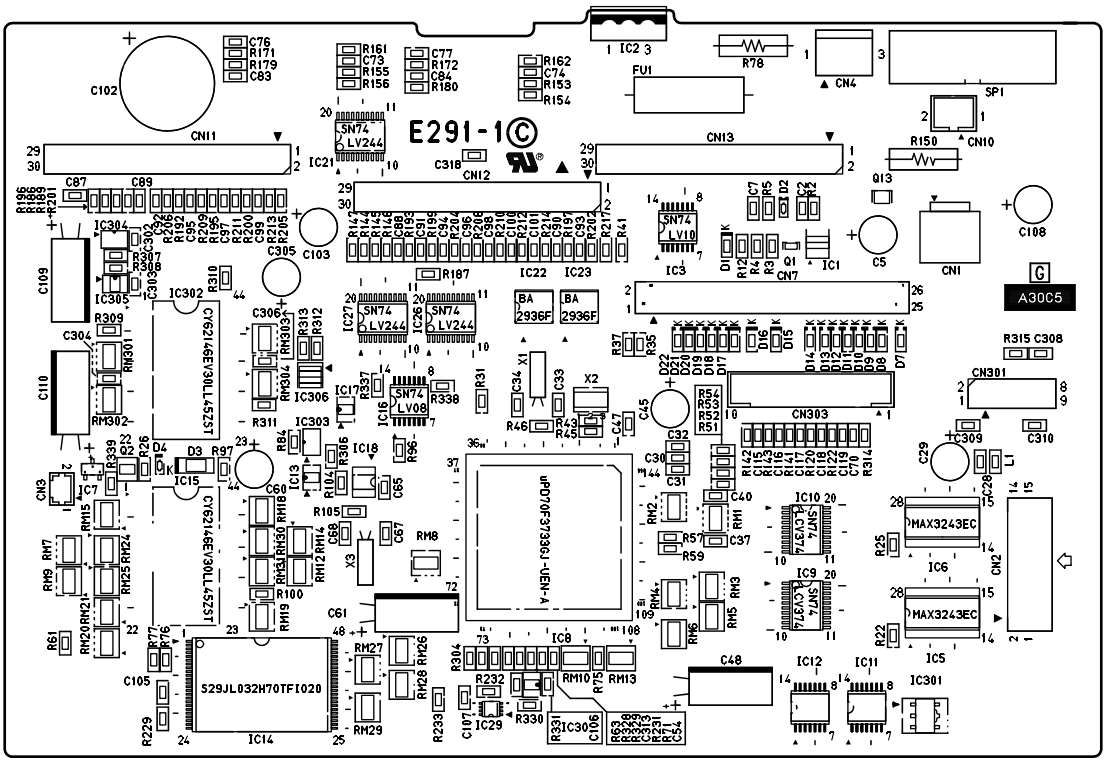

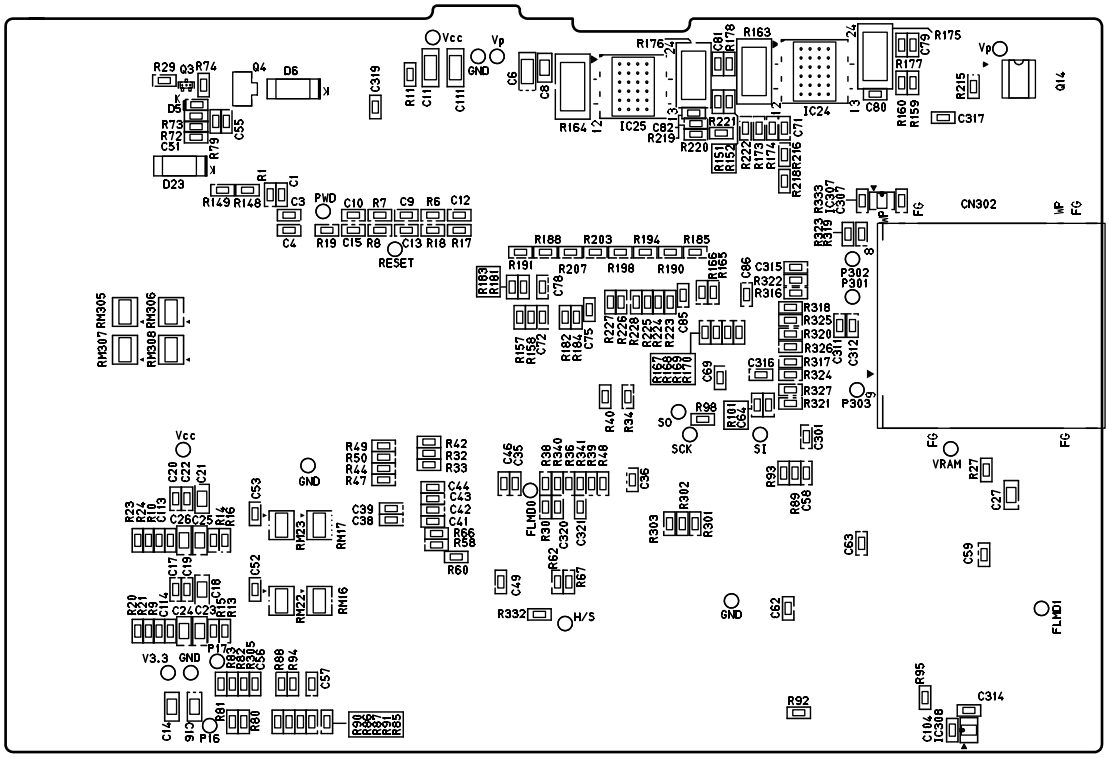

7. EXPLODED VEW / PARTS LIST

<CONTENTS>

7-1. EXPLODE VIEW (*BODY*) 38

7-2. EXPLODE VIEW (*STROKE KEY*) 39

7-3. EXPLODE VIEW (*HYBRID KEY*) 40

7-4. PARTS LIST 41

7-5. DRAWER S-type (*DL-1336/1846*) 44

7-6. DRAWER M-type (*DL-2437/2818/2819/2820/2821*) 46

NOTES :

1. Price and specifications are subject to change without prior notice.
2. As for spare parts order and supply, refer to the “GUIDEBOOK for Spare Parts Supply”, published separately.
3. The numbers in item column correspond to the same numbers in drawing.
4. CASIO does not supply the spare parts without parts code.
5. Refer to the latest "Parts Price Code" at “PARTS FINDER” on the Casio Service WEB site (https://www.servicecasio.com).
6. Remarks

   Q’ty: Quantity used per unit

   RANK: A = Essential
   B = Stock recommended
   C = Less recommended
   X = No stock recommended

7-1. EXPLODED VIEW (*BODY*)

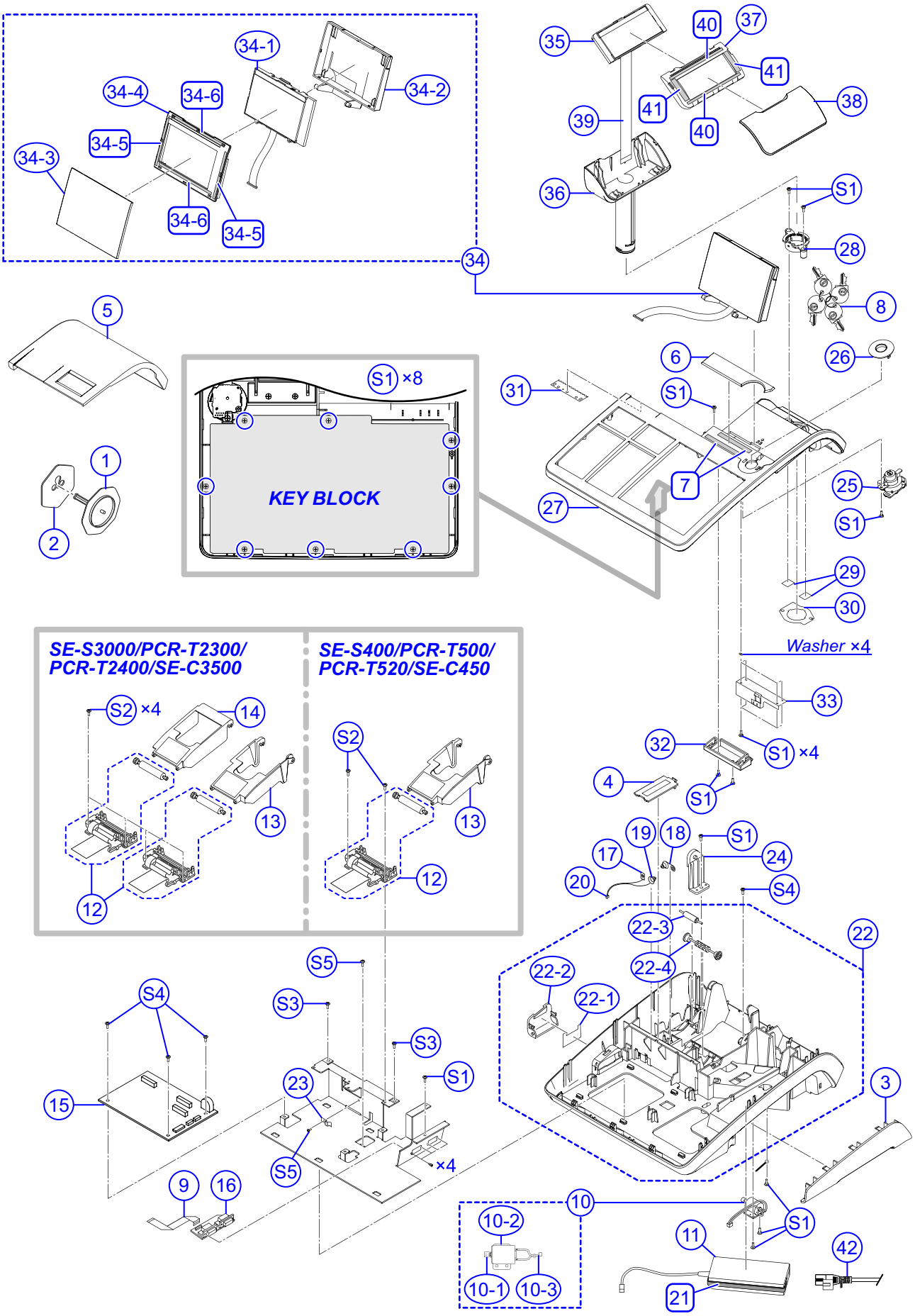

7-2. EXPLODED VIEW (*STROKE KEY*)

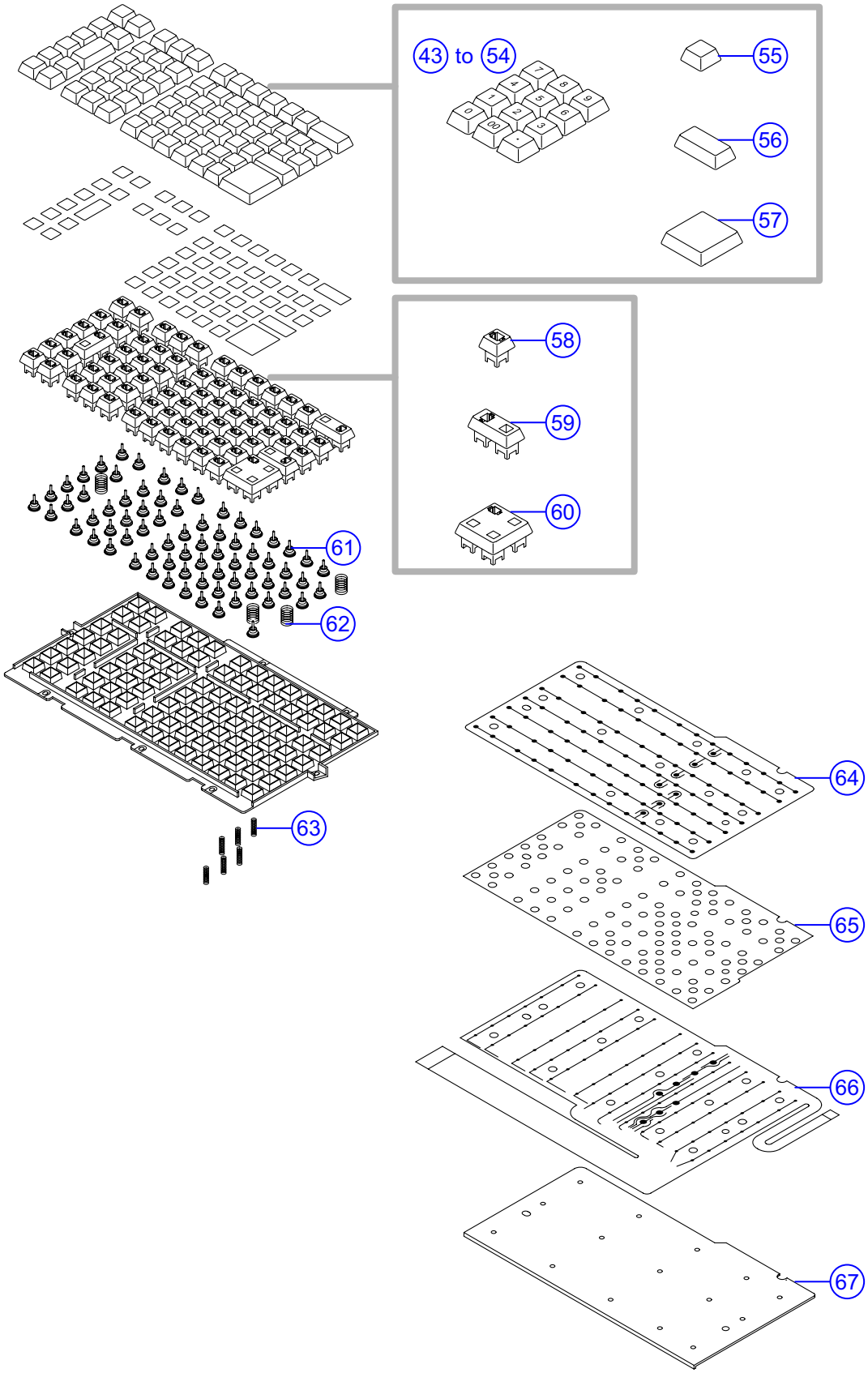

7-3. EXPLODED VIEW (*HYBRID KEY*)

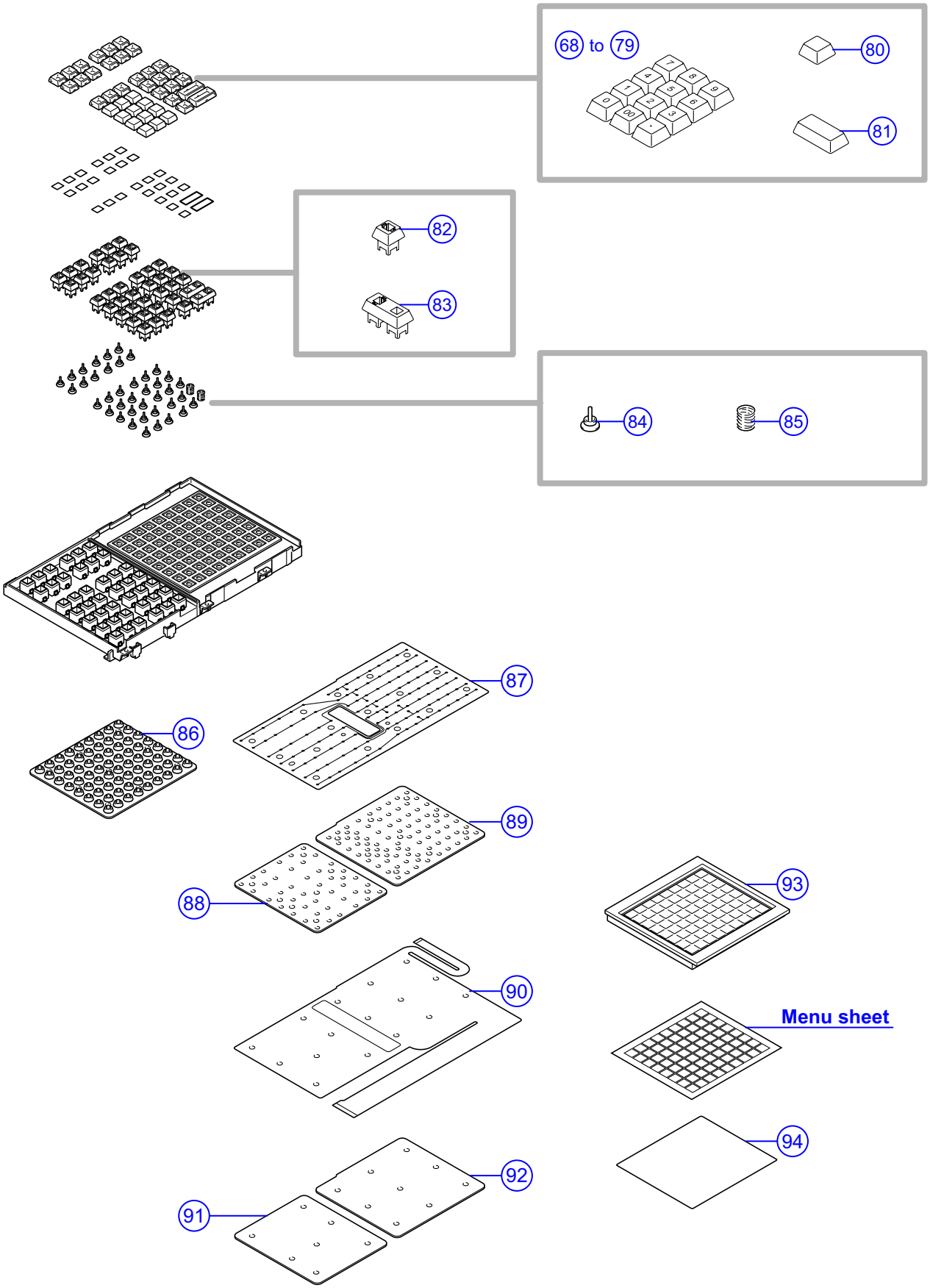

7-4. PARTS LIST

1 SE-S400_SR 3 PCR-T500 5 SE-C450 7 PCR-T2300 9 SE-C3500
2 SE-S400_BK 4 PCR-T520 6 SE-S3000 8 PCR-T2400

N	Item	Code No.	Parts Name	Specification	Q'TY									R
					1	2	3	4	5	6	7	8	9	
		FINAL-ASSY												
	1	10421864	PULLY/WIND	RJE503538-001V02	1	1	1	1	1	1	1	1	1	A
	2	10445632	SPOOL/PAPER	RJE504072-001V01	1	1	1	1	1	1	1	1	1	A
	3	10452933	COVER/CONNECTOR	RJE502339-005V04	1	1	1	1	1	1	1	1	1	C
	4	10319830	COVER/BATTERY	RJE502601-001V02	1	1	1	1	1	1	1	1	1	C
	5	10452946	COVER/PRINTER	RJE502345-015V02	1			1						C
	5	10452949	COVER/PRINTER	RJE502345-016V02		1	1		1					C
	5	10452956	COVER/PRINTER	RJE502345-017V02						1		1		C
	5	10452958	COVER/PRINTER	RJE502345-018V02							1		1	C
	6	10452947	PLATE/DISPLAY	RJE504100-001V01	1									C
	6	10452950	PLATE/DISPLAY	RJE504100-002V01		1								C
	6	10452953	PLATE/DISPLAY	RJE504100-003V01			1							C
	6	10454353	PLATE/DISPLAY	RJE504100-004V02				1						C
	6	10452955	PLATE/DISPLAY	RJE504100-009V01					1					C
	6	10452957	PLATE/DISPLAY	RJE504100-005V01						1				C
	6	10452960	PLATE/DISPLAY	RJE504100-006V01										C
	6	10452959	PLATE/DISPLAY	RJE504100-007V01							1			C
	6	10452961	PLATE/DISPLAY	RJE504100-008V01								1		C
	6	10452963	PLATE/DISPLAY	RJE504100-010V01									1	C
	7	10284497	W-TAPE/65x8	RJE502542-002V01	2	2	2	2	2	2	2	2	2	X
	8	10254924	KEY SET/MODE SW	RJE500074*002V03	1	1	1	1	1	1	1	1	1	C
	S1		SCREW	S-BDPT-3X8ZC	3	3	3	3	3	3	3	3	3	X
		B-CASE-ASSY												
	9	10370496	CABLE/FFC JOINER	E441341-014V03	1	1	1	1	1	1	1	1	1	B
	10	10294860	MOTOR-ASSY	RJE502538*002V01	1	1	1	1	1	1	1	1	1	B
	10-1	10234746	RUBBER/WINDER	RJE502008-001V01	1	1	1	1	1	1	1	1	1	C
	10-2	10282326	CONNECTOR ASSY/MOTOR	RJE502393*001V02	1	1	1	1	1	1	1	1	1	C
	10-3	10264935	MOTOR	WRF-370C-13380	1	1	1	1	1	1	1	1	1	B
	11	10452921	PS-UNIT	EHF0800400Y1BA	1	1	1	1	1	1	1	1	1	C
	12	10448032	PRINTER/THERMAL	LTP01-245-02	1	1	1	1	1	2	2	2	2	A
	13	10359207	PLATEN ARM/J	RJE502343-001V03	1	1	1	1	1	1	1	1	1	C
	14	10317125	PLATEN ARM/R	RJE502344-001V02						1	1	1	1	C
	15	10452862	PCB ASSY/E291-1	RJE504081*001V01	1	1	1	1	1					A
	15	10452868	PCB ASSY/E291-1	RJE504081*002V01						1	1	1	1	A
		10225980	FUSE	230.600MXP	1	1	1	1	1	1	1	1	1	A
	16	10294944	PCB ASSY/E292-COM	RJE502628*002V01	1	1	1	1	1	1	1	1	1	A
	17	63452238	SPRING/BATTERY	A42606B-1	1	1	1	1	1	1	1	1	1	C
	18	10294939	SPRING/BATTERY	RJE502620-001V01	1	1	1	1	1	1	1	1	1	C
	19	10294940	SPRING/BATTERY	RJE502622-001V01	1	1	1	1	1	1	1	1	1	C
	20	10282081	CONNECTOR ASSY/BATTERY	RJE502392*001V02	1	1	1	1	1	1	1	1	1	C
	21	10127255	CUSHION/120X6	RJE500743-001V01	1	1	1	1	1	1	1	1	1	C
	22	10452919	B-CASE-SUBASSY	RJE502637*005V01	1	1	1	1	1					C
	22	10452925	B-CASE-SUBASSY	RJE502637*006V03						1	1	1	1	C
	22-1	10460652	BLIND/PLATE/SD	RJE504123V01-1	1	1	1	1	1	1	1	1	1	C
	22-2	10460808	COVER/SD	RJE502602V03-3	1	1	1	1	1	1	1	1	1	C
	22-3	10142488	ROLLER/P	RJE500850-001V01	1	1	1	1	1	1	1	1	1	C
	22-4	10236328	ROLLER/RP	RJE500121V02-1						1	1	1	1	C
	23	10292223	HOLDER/IC	RJE502611-001V01	1	1	1	1	1	1	1	1	1	C
	24	10346725	PIVOT	RJE502342-002V03						1	1	1	1	C
	S1		SCREW	S-BDPT-3X8ZC	4	4	4	4	4	5	5	5	5	
	S2		SCREW	S-BDST-2X5Z3	2	2	2	2	2	4	4	4	4	
	S3		SCREW	S-FLPT-3X8ZC	2	2	2	2	2	2	2	2	2	
	S4		SCREW	S-BDST-3X8Z3	4	4	4	4	4	4	4	4	4	
	S5		SCREW	S-BDMA-3X5Z3	2	2	2	2	2	2	2	2	2	

1 SE-S400_SR 3 PCR-T500 5 SE-C450 7 PCR-T2300 9 SE-C3500
2 SE-S400_BK 4 PCR-T520 6 SE-S3000 8 PCR-T2400

N	Item	Code No.	Parts Name	Specification	Q'TY									R
					1	2	3	4	5	6	7	8	9	
		U-CASE-ASSY												
	25	10333439	SWITCH ASSY/MODE KEY	E341249*005V01	1	1	1	1	1	1	1	1	1	C
	26	10291888	COVER/MODE KEY	RJE502607-001V01	1	1	1	1	1	1	1	1	1	C
	27	10452936	CASE/UPPER	RJE502348-018V03	1			1						C
	27	10452905	CASE/UPPER	RJE502348-019V03		1	1							C
	27	10452915	CASE/UPPER	RJE502348-022V03					1					C
	27	10452908	CASE/UPPER	RJE502348-020V03						1		1		C
	27	10452912	CASE/UPPER	RJE502348-021V03							1			C
	27	10452944	CASE/UPPER	RJE502348-023V03									1	C
	28	10454352	BUSH/RDP	RJE502265-002V02	1	1	1	1	1	1	1	1	1	C
	29	10454708	CUSHION/RDP	RJE504146-001V01	2	2	2	2	2	2	2	2	2	X
	30	10454709	PLATE/RDP	RJE504145-001V01	1	1	1	1	1	1	1	1	1	X
	31	10393351	CUTTER/PAPER	RJE503702-001V01	1	1	1	1	1	1	1	1	1	X
	32	10452937	HINGE/DISPLAY	RJE504097-001V01	1	1	1	1	1	1	1	1	1	X
	33	10456869	SPRING/TILT	RJE504147-001V02	1	1	1	1	1	1	1	1	1	X
	34	10452881	DP-ASSY	RJE504113*001V01	1			1		1		1		A
	34	10452897	DP-ASSY	RJE504113*002V01		1	1		1		1		1	A
	34-1	10452882	PCB ASSY/E291-E2-1	RJE504109-001V01	1	1	1	1	1	1	1	1	1	A
	34-2	10452883	CASE/DISPLAY	RJE504102-001V01	1			1		1		1		C
	34-2	10452898	CASE/DISPLAY	RJE504102-002V01		1	1		1		1		1	C
	34-3	10452894	BOARD/DISPLAY	RJE504101-001V01	1			1		1		1		C
	34-3	10452884	BOARD/DISPLAY	RJE504101-002V01		1	1		1		1		1	C
	34-4	10452895	MASK/DISPLAY	RJE504098-001V01	1			1		1		1		C
	34-4	10452895	MASK/DISPLAY	RJE504098-001V01		1	1		1		1		1	C
	34-5	10127215	W-TAPE/77x4.5	RJE500664-003V01	2	2	2	2	2	2	2	2	2	X
	34-6	10240845	W-TAPE/110x4.5	RJE500664-004V01	2	2	2	2	2	2	2	2	2	X
	35	10452886	PCB ASSY/E291-E2-2	RJE504110*001V01	1	1	1	1	1	1	1	1	1	A
	36	10452887	CASE/R-DISPLAY	RJE504093-001V01	1			1		1		1		C
	36	10452902	CASE/R-DISPLAY	RJE504093-002V01		1	1		1		1		1	C
	37	10452888	MASK/R-DISPLAY	RJE504096-001V01	1			1		1		1		C
	37	10455118	MASK/R-DISPLAY	RJE504096-002V01		1	1		1		1		1	C
	38	10452899	BOARD/R-DISPLAY	RJE504099-001V01	1			1		1		1		C
	38	10452903	BOARD/R-DISPLAY	RJE504099-002V01		1	1		1		1		1	C
	39	10452900	CABLE/FFC JOINER	RJE504106-001V01	1	1	1	1	1	1	1	1	1	X
	40	10240845	W-TAPE/110x4.5	RJE500664-004V01	2	2	2	2	2	2	2	2	2	X
	41	10406956	W-TAPE/45x9.5	RJE500664-005V01	2	2	2	2	2	2	2	2	2	X
	S1		SCREW	S-BDPT-3X8ZC	15	15	15	15	15	15	15	15	15	
		POWER CORD												
	42	10300540	CORD/POWER/EU	2158H10C3	1				1	1			1	C
	42	10452948	CORD/POWER/US	GL12060047	1	1	1	1	1	1	1	1	1	C
	42	10300537	CORD/POWER/UK	2165H10C3	1				1	1			1	C
	42	10300539	CORD/POWER/AUS	2155H10C3	1				1	1			1	C
		STROKE KEY BLOCK												
	43	10370540	BUTTON/1	RJE501915-049V04	1	1	1	1		1	1	1		X
	44	10370541	BUTTON/2	RJE501915-050V04	1	1	1	1		1	1	1		X
	45	10370567	BUTTON/3	RJE501915-051V04	1	1	1	1		1	1	1		X
	46	10370568	BUTTON/4	RJE501915-052V04	1	1	1	1		1	1	1		X
	47	10370569	BUTTON/5	RJE501915-053V04	1	1	1	1		1	1	1		X
	48	10370570	BUTTON/6	RJE501915-054V04	1	1	1	1		1	1	1		X
	49	10370571	BUTTON/7	RJE501915-055V04	1	1	1	1		1	1	1		X
	50	10370542	BUTTON/8	RJE501915-056V04	1	1	1	1		1	1	1		X
	51	10370543	BUTTON/9	RJE501915-057V04	1	1	1	1		1	1	1		X
	52	10370544	BUTTON/0	RJE501915-058V04	1	1	1	1		1	1	1		X
	53	10370545	BUTTON/.	RJE501915-059V04	1	1	1	1		1	1	1		X
	54	10370546	BUTTON/00	RJE501915-060V04	1	1	1	1		1	1	1		X

1 SE-S400_SR 3 PCR-T500 5 SE-C450 7 PCR-T2300 9 SE-C3500
2 SE-S400_BK 4 PCR-T520 6 SE-S3000 8 PCR-T2400

N	Item	Code No.	Parts Name	Specification	Q'TY									R
					1	2	3	4	5	6	7	8	9	
	55	10327767	CAP/S	E341251-002V04	51	51	51	51		56	58	58		A
	55	10327767	CAP/S	E341251-002V04	51	51	51	51		56	58	58		A
	56	10327769	CAP/L	RJE500370-002V04	3	3	3	3		3	2	2		A
	57	10327771	CAP/LLL	RJE500374-002V04	1	1	1	1		1	1	1		A
	58	10254828	KEYTOP/S	E341250-002V04	63	63	63	63		68	70	70		A
	59	10233587	KEYTOP/L	RJE500369-004V02	3	3	3	3		3	2	2		A
	60	10235021	KEYTOP/LLL	RJE500372-003V02	1	1	1	1		1	1	1		A
	61	10166869	RUBBER/CONTACT	RJE501209-001V01	67	67	67	67		72	73	73		B
	62	10193645	SPRING/COMPRESS	E441298-001V03	4	4	4	4		4	4	4		C
	63	10193646	SPRING/COMPRESS	E441298-002V03	6	6	6	6		6	6	6		C
	64	10276423	SHEET/COMMON	RJE502283-001V01	1	1	1	1		1	1	1		B
	65	10276424	SPACER	RJE502284-001V01	1	1	1	1		1	1	1		C
	66	10276422	SHEET/FPC	RJE502282-001V01	1	1	1	1		1	1	1		B
	67	10274354	CHASSIS/KEY	RJE502285-001V01	1	1	1	1		1	1	1		C
		HYBIRD KEY BLOCK												
	68	10370540	BUTTON/1	RJE501915-049V04					1				1	X
	69	10370541	BUTTON/2	RJE501915-050V04					1				1	X
	70	10370567	BUTTON/3	RJE501915-051V04					1				1	X
	71	10370568	BUTTON/4	RJE501915-052V04					1				1	X
	72	10370569	BUTTON/5	RJE501915-053V04					1				1	X
	73	10370570	BUTTON/6	RJE501915-054V04					1				1	X
	74	10370571	BUTTON/7	RJE501915-055V04					1				1	X
	75	10370542	BUTTON/8	RJE501915-056V04					1				1	X
	76	10370543	BUTTON/9	RJE501915-057V04					1				1	X
	77	10370544	BUTTON/0	RJE501915-058V04					1				1	X
	78	10370545	BUTTON/.	RJE501915-059V04					1				1	X
	79	10370546	BUTTON/00	RJE501915-060V04					1				1	X
	80	10327767	CAP/S	E341251-002V04					28				28	A
	81	10327769	CAP/L	RJE500370-002V04					2				2	A
	82	10254828	KEYTOP/S	E341250-002V04					40				40	A
	83	10233587	KEYTOP/L	RJE500369-004V02					2				2	A
	84	10166869	RUBBER/CONTACT	RJE501209-001V01					41				41	A
	85	10193645	SPRING/COMPRESS	E441298-001V03					2				2	C
	86	10276644	RUBBER/CONTACT/T	RJE502275-001V01					1				1	B
	87	10276639	SHEET/COMMON	RJE502268-001V01					1				1	B
	88	10276640	SPACER/S	RJE502269-001V01					1				1	C
	89	10276641	SPACER/T	RJE502269-002V01					1				1	C
	90	10371423	SHEET/FPC	RJE502267-001V03					1				1	B
	91	10276642	CHASSIS/KEY/S	RJE502270-001V01					1				1	C
	92	10276643	CHASSIS/KEY/T	RJE502271-001V01					1				1	C
	93	10276740	SHEET/COVER	RJE502435-001V01					1				1	B
	94	10276743	SHEET/NO SLIP	RJE502277-001V01					1				1	C

7-5. DRAWER S-type (*DL-1336/1846*)

EXPLODED VIEW

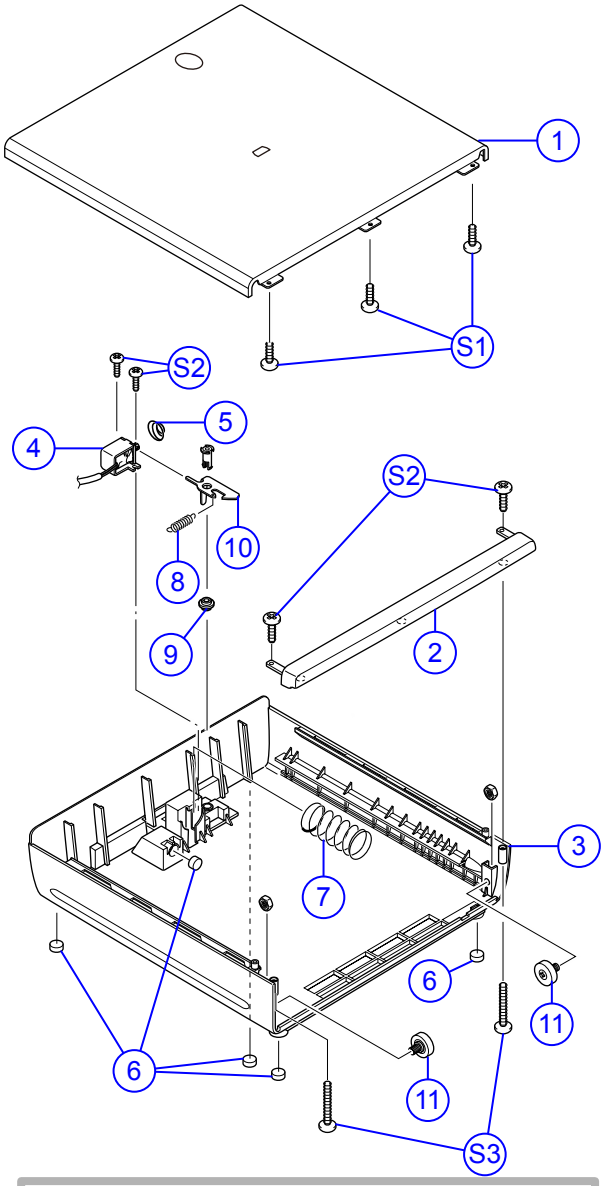

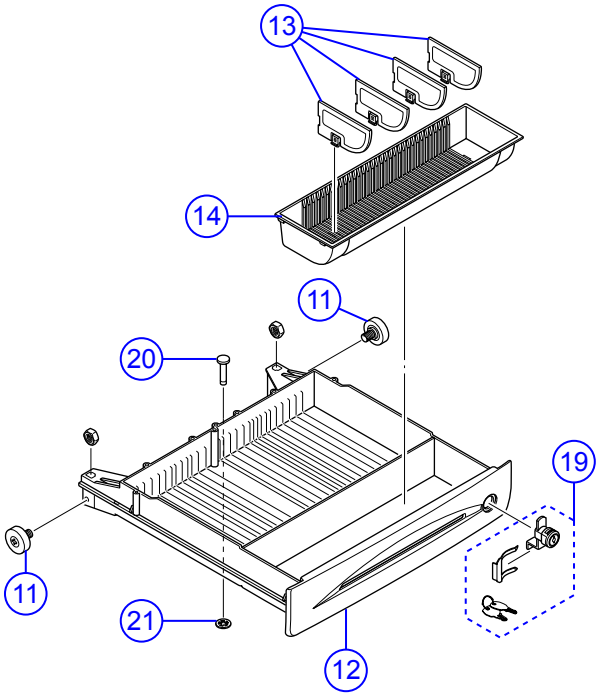

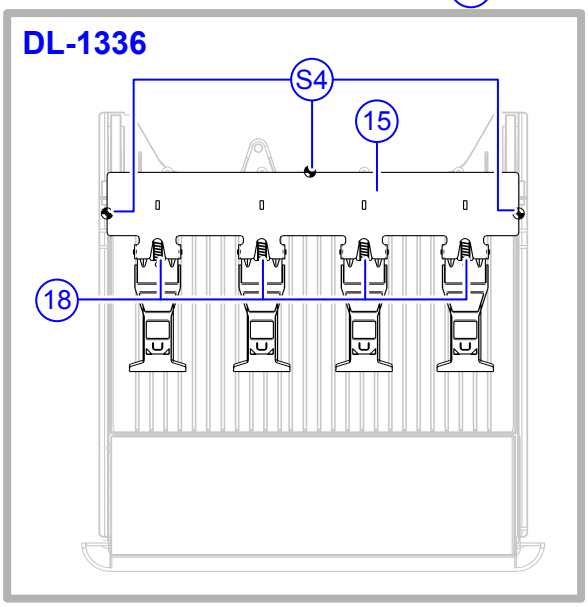

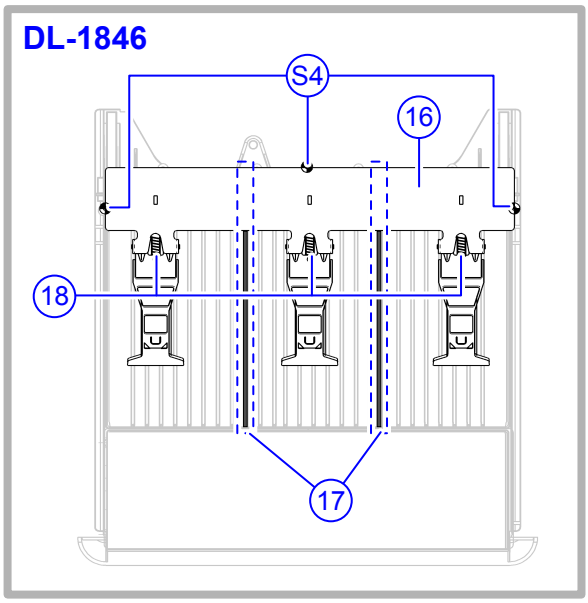

PARTS LIST

1 DL-1336
2 DL-1846

N	Item	Code No.	Parts Name	Specification	Q'TY		R
					1	2	
	1	10452713	COVER/TOP	RJE503983-009V01	1	1	X
	2	10238194	PLATE/FRONT	RJE501359-003V01	1	1	C
	3	10292206	CASE/MAIN	RJE500670-003V04	1	1	C
	4	10078787	SUB ASSY/SOLENOID	E341255*1	1	1	C
	5	10267909	SPRING/PLUNGER	RJE502245-001V01	1	1	C
	6	10167366	RUBBER/PAD	RJE501204-001V01	5	5	C
	7	10194207	SPRING/PRESS	E412137-001V02	1	1	C
	8	10201068	LOCK/SPRING	RJE500007-001V02	1	1	C
	9	10127603	AXIS/LEVER HOOK	RJE500674-001V01	1	1	C
	10	10236805	LEVER/HOOK	E341286-001V03	1	1	C
	11	10384538	ROLLER/DELRIN	PB-19B2	4	4	C
	12	10431048	CASE/BILL COIN	RJE500671-009V01	1		X
	12	10208223	CASE/BILL COIN	RJE500671-005V01		1	X
	13	10298552	SEPARATER/COIN	RJE500213-002V03	4	4	C
	14	10298558	CASE/COIN	RJE500212-002V04	1	1	C
	15	10231347	SUB ASSY/BILL HOLDER	RJE501337*001V03	1		X
	16	10231349	SUB ASSY/BILL HOLDER	RJE501337*002V03		1	X
	17	10298553	SEPARATER/COIN	RJE500214-002V03		2	C
	18	10276626	SPRING/BILL HOLDER	E441357-001V03	4	3	X
	19	10120527	LOCK/CYLINDER	CL-16C	1	1	C
	20	10238184	RIVET	T-CRTP-5X26Z3	1	1	X
	21	55801452	CS FIX	CSTW-5	1	1	X
	S1		SCREW	3X6 ZMC-3	3	3	
	S2		SCREW	3X8 ZMC-3	4	4	
	S3		SCREW	S-PAST-3X18Z3	2	2	
	S4		SCREW	S-PAB0-3X8Z3	3	3	

7-6. DRAWER M-type (*DL-2437/2818/2819/2820/2821*)

EXPLODED VIEW

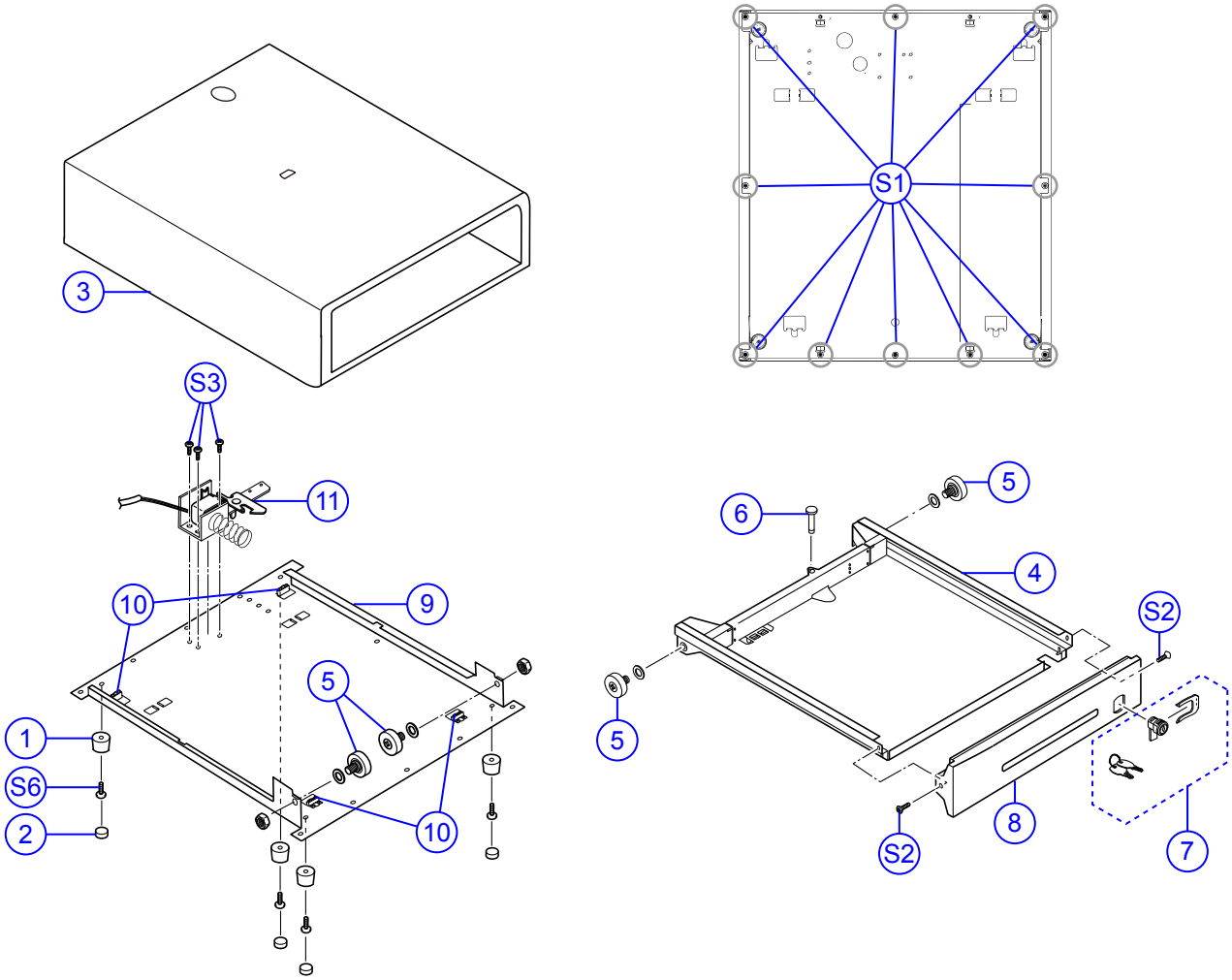

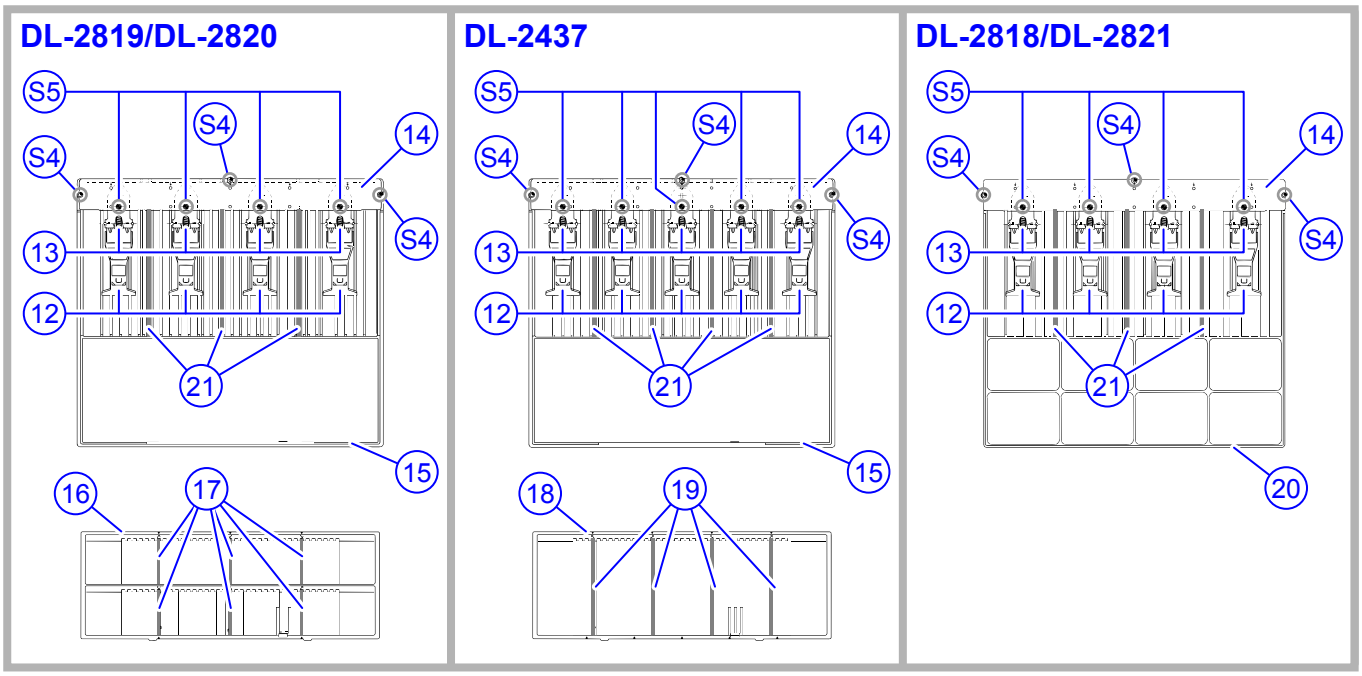

PARTS LIST

1 DL-2437
2 DL-2818
3 DL-2819
4 DL-2820
5 DL-2821

N	Item	Code No.	Parts Name	Specification	Q'TY					R
					1	2	3	4	5	
	1	10203171	CASE/FOOT RUBBER	RJE500667-001V02	4	4	4	4	4	C
	2	10167366	RUBBER/FOOT	RJE501204-001V01	4	4	4	4	4	C
	3	10452715	SUB ASSY/BOX	RJE502373*002V09	1	1	1	1	1	C
	4	10223071	SUB ASSY/DRAWER	E341274*002V04	1	1	1	1	1	C
	5	10378459	ROLLER/DELRIN	PB-19B1	4	4	4	4	4	C
	6	52000106	RIVET	5X30	1	1	1	1	1	X
	7	10203374	LOCK/CYLINDER	CL-23	1	1	1	1	1	C
	8	10292500	PANEL/FRONT	RJE501385-002V01	1	1	1	1	1	X
	9	10203587	CHASSIS/BOTTOM	RJE501384-001V01	1	1	1	1	1	X
	10	10317100	RUBBER/DUMPER	RJE502883-001V01	4	4	4	4	4	C
	11	10122202	LOCK ASSY	RJE500567*003V01	1		1		1	C
	11	10203176	LOCK ASSY	RJE500567*004V01		1		1		C
	12	10230104	SUB ASSY/BILL HOLDER	E341290*002V04	5	4	4	4	4	C
	13	10276626	SPRING/BILL HOLDER	E441357-001V03	5	4	4	4	4	C
	14	10194233	PLATE/BILL HOLDER	E240845-001V02	1	1	1	1	1	C
	15	10298565	CASE/BILL	E140505-002V03	1		1	1		C
	16	10298559	CASE/COIN	RJE500217-002V02			1	1		C
	17	10298554	SEPARATER/COIN	RJE500216-002V02			6	6		C
	18	10298560	CASE/COIN	RJE500284-002V02	1					C
	19	10298556	SEPARATER/COIN	RJE500285-002V02	4					B
	20	10298566	CASE/BILL COIN	RJE500367-002V02		1			1	C
	21	10298555	SEPARATER/BILL	RJE500219-002V02	4	3	3	3	3	B
	S1		SCREW	3X6 ZMC-3	10	10	10	10	10	
	S2		SCREW	3X6 Ni	2	2	2	2	2	
	S3		SCREW	4X5 ZMC-3	3	3	3	3	3	
	S4		SCREW	3X8 ZMC-3	3	3	3	3	3	
	S5		SCREW	3X5 Ni	5	4	4	4	4	
	S6		SCREW	4X8 ZMC-3	4	4	4	4	4	

CASIO COMPUTER CO., LTD.
CS Technical Department

TOKYO, JAPAN